Harley-Davidson

SERVICE MANUAL SUPPLEMENT DE40 Electric Golf Car

1978

Part No. 99494-77S

PRODUCT 1

BRAKES 2

ELECTRICAL 3

1978
DE40

SERVICE MANUAL SUPPLEMENT

The maintenance and repair information in this manual applies to the 1978 Harley-Davidson DE40 Golf Car.

COPYRIGHT 1981
BY HARLEY-DAVIDSON MOTOR CO., INC.
Subsidiary of AMF Incorporated
ALL RIGHTS RESERVED

UL-1M-3/81

PRINTED IN U.S.A.

READERS COMMENTS

The Harley-Davidson Technical Publications Department maintains a continuous effort to improve the quality and usefulness of its publications. To do this effectively we need user feedback — your critical evaluation of this manual.

Please comment on this manual's completeness, accuracy, organization, usability and readability.

_____

_____

_____

_____

_____

_____

_____

Did you find errors in this manual? _____

_____

_____

_____

_____

How can this manual be improved? _____

_____

_____

_____

_____

_____

Occupation: _____

Name _____ Dealership _____

Street _____ Department _____

City _____ State _____ Zip _____

CUT HERE

1978
DE40

Clip out and mail to:
Technical Publications Department,
AMF/Harley-Davidson
P.O. Box 653
Milwaukee, WI 53201

FOREWORD

This service and repair manual has been prepared with two purposes in mind. First, it will acquaint the reader with the construction of the Harley-Davidson product and assist him in performing basic maintenance and repair. Secondly, it will introduce to the professional Harley-Davidson mechanic the latest field-tested and factory-approved major repair methods. We sincerely believe that this manual will make your association with Harley-Davidson products more pleasant and profitable.

HOW TO USE YOUR SERVICE MANUAL

Your Service Manual is arranged for quick, easy reference. This manual is divided into numbered sections. Sections are then divided into sub-sections. Use this manual as follows:

1. Check the TABLE OF CONTENTS located in the front of each section to find subject desired.
2. Page number is listed across from subject. Page number consists of section number and page number.
3. Information is presented in a definite order as follows:

   Adjustments
   Disassembly
   Cleaning, Inspection and Repair
   Assembly

In figure legends, the number following a name of a part indicates the quantity necessary for one complete assembly.

NOTE

All information for servicing a part should be read ***before*** *repair work is started to avoid needless disassembly.*

PREPARATION FOR SERVICE

Proper preparation is very important for efficient service work. A clean work area at the start of each job will allow you to perform the repair as easily and quickly as possible, and reduce the incidence of misplaced tools and parts. A golf car that is excessively dirty should be cleaned before work starts. Cleaning will occasionally uncover trouble sources. Tools, instruments and parts needed for the job should be gathered before work is started. Interrupting a job to locate tools or parts is a needless delay.

WARNING

Working on heavy golf cars without following proper procedures and using proper lifting equipment may result in car damage or personal injury.

WARNING

Safety procedures are essential. A running golf car must be worked on with great care. Avoid spinning disc brake and wheels. Use caution and common sense.

SERVICE BULLETINS

In addition to the information given in this Service Manual, Service Bulletins are issued to Harley-Davidson Dealers from time to time, which cover interim engineering changes and supplementary information. Service Bulletins should be consulted for complete information on the models covered by this manual.

USE GENUINE REPLACEMENT PARTS

WARNING

When replacement parts are required, use only genuine Harley-Davidson parts or parts with equivalent characteristics including type, strength and material. Failure to do so may result in product malfunction and possible injury to the operator and/or passenger.

To ensure a satisfactory and lasting repair job, follow the manual instructions carefully and use only genuine Harley-Davidson replacement parts. Behind the emblem bearing the words GENUINE HARLEY-DAVIDSON is more than half a century of designing, research, manufacturing, testing and inspecting experience.

This is your insurance that the parts you are using will fit right, operate properly and last longer. When you use genuine Harley-Davidson parts, you use the best.

PRODUCT REFERENCES

When reference is made in this manual to a specific brand name product, tool or instrument, an equivalent product, tool or instrument may be used in place of the one mentioned.

CONTENTS

All photographs and illustrations may not necessarily depict the most current model or component, but are based on the latest production information available at the time of publication.

Harley-Davidson Motor Co., Inc., reserves the right to change specifications, equipment, or designs at any time without notice and without incurring obligation.

WARNINGS AND CAUTIONS

Statements in this manual preceded by the words WARNING or CAUTION and printed in bold face are very important.

WARNING

Means there is the possibility of personal injury to your self or others.

CAUTION

Means there is the possibility of damage to the vehicle.

We recommend you take special notice of these items.

WARNING

Proper service and repair is important for the safe, reliable operation of all mechanical products. The service procedures recommended and described in this service manual are effective methods for performing service operations. Some of these service operations require the use of tools specially designed for the purpose. These special tools should be used when and as recommended.

It is important to note that some warnings against the use of specific service methods which could damage the golf car or render it unsafe are stated in this service manual. However, please remember that these warnings are not all inclusive. Since Harley-Davidson could not possibly know, evaluate and advise the service trade of all possible ways in which service might be done or of the possible hazardous consequences of each way, we have not undertaken any such broad evaluation. Accordingly, anyone who uses a service procedure or tool which is not recommended by Harley-Davidson must first thoroughly satisfy himself that neither his nor the operator's safety will be jeopardized by the service methods selected.

Harley-Davidson products are manufactured under one or more of the following patents: U.S. Patents — 2986162, 2987934, 2998809, 3116089, 3144631, 3144860, 3226994, 3229792, 3434887, 3559773, 3673359, 3680403, 3683716, 3709317, Des. 225 626.

TABLE OF CONTENTS

SECTION 1 — CHASSIS

Page No.

Specifications 1-1
Tires/Wheels 1-1
Steering/Front Suspension 1-1
Steering Gear Lubricant 1-1
Torques 1-1

Kingpin 1-3
Removal 1-3
Cleaning/Inspection and Repair 1-3
Assembly 1-3

Seats 1-7
Removal 1-7
Installation 1-7
Seat Latches 1-7
Seat Latch Adjustment 1-7

SECTION 2 — BRAKES

General Information 2-1
Foot Brake 2-1
Parking Brake 2-1
Brake Puck Wear Limit 2-1
Adjustments 2-1

Brake Cable and Pucks 2-5
Removal 2-5
Disasssembly 2-6
Cleaning and Lubrication 2-7
Assembly 2-8
Installation 2-8

Brake Disc 2-9
Checking Brake Disc Runout 2-9
Removal 2-9
Installation 2-9

SECTION 3 — ELECTRICAL

Specifications 3-1
Traction Motors 3-1
Micro-switch 3-3
General Information 3-3
Adjustment 3-3

NOTES

PRODUCT 1

SECTION PAGE NO.

1. Specification 1-1
2. Kingpin 1-3
3. Seats 1-7

SPECIFICATIONS

TIRES/WHEELS

Type	High Flotation
Tire Size	8.50 x 8
Air Pressure	18 psi (1.7 atm)

STEERING/FRONT SUSPENSION

Camber	0° (Wheel at right angle [90°] to ground)
Toe	.250 in. (6.4 mm) Toe-in

STEERING GEAR LUBRICANT

Type	Harley-Davidson TRANSMISSION LUBRICANT, Part No. 99890-61A
Level	Fill to overflowing

TORQUES

Steering Gear Unit Bolts	10-15 ft-lbs (1.7 kgm)
Tie Rod Castle Nuts	25-28 ft-lbs (3.5-3.9 kgm)
Leaf Spring to King Pin Nuts	35-40 ft-lbs (4.8-5.5 kgm)
Wheel (Lugs) Nuts	35-40 ft-lbs (4.8-5.5 kgm)
Seat Latch Bracket Bolts	8-10 ft-lbs (1.2 kgm)

NOTES

KINGPIN

REMOVAL (Figure 1-1)

WARNING

To avoid accidental start-up of a car and possible personal injury, disconnect batteries before working on vehicle. Remove the 2 negative battery cables, which run to the Master Drive assembly, from the batteries.

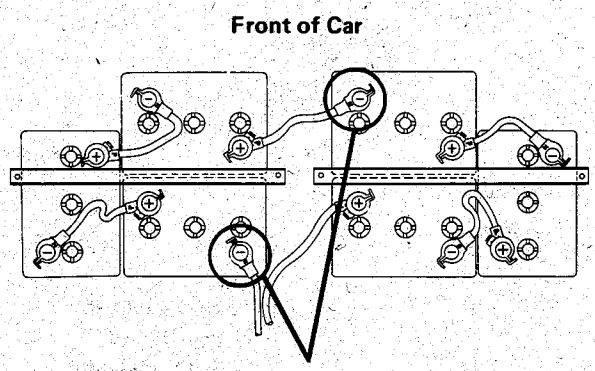

Remove these battery cables before working on car.

WARNING

Use extreme caution lifting, when working on lifted golf car. Car should be on a flat, hard and level surface when lifting.

When lifting the golf car for service, use a sturdy lifting device such as a hoist or floor jack. Lift the left side of car and place jack stand under frame. Repeat for the right side.

1. Remove wheels and hubs.
2. Remove cotter pin (15) and castle nut (16) from each of the two tie-rods.
3. Working on one side of car at a time to hold suspension in place, remove kingpin nut (1).
4. Remove serrated nuts (11), stud (10), washers (9), kingpin (8), spring washers (12) and washer (13). Note position of spring washers (12) before removing from kingpin.
5. Remove locknut (6), bolt (5), swivel block (3), Delrin washers (4) and thrust washer (2).

CLEANING, INSPECTION AND REPAIR

1. Clean all parts and examine for wear or damage.
2. Lube grease fittings (14, Figure 1-1).
3. Replace tie-rod if play is excessive or if rubber boot is damaged. Before reassembly apply liberal amount of grease to ball underneath each rubber boot.

ASSEMBLY (Figure 1-1)

1. Mount swivel block (3) to A frame using Delrin washers (4), bolt (5) and locknut (6).
2. If sleeve (7) was removed, apply chassis grease, and slide into leaf spring.
3. Install kingpin (8) over spring eye placing washers (9) against the inside of each shackle leg. Slide shackle stud (10) through assembly and secure loosely with nuts (11).

NOTE

Nuts (11) must be threaded equally on each end of stud (10).

4. With shackle nuts (11) slightly loose, swing kingpin (8) up to a vertical position.
5. Slide two spring washers (12) (with their concave sides together) and washer (13) onto kingpin (8).
6. Insert kingpin (8) through A-frame into swivel block (3) and tighten nut (1) against kingpin shoulder until there is no end play. Tighten locknut (6) to 35-45 ft-lbs (4.8-5.5 kgm) torque.
7. Install grease fitting (14), if removed, to swivel block (3).
8. Lube and install tie-rods (17) using castle nuts (16) and cotter pins (15).
9. Install wheels and hubs.
10. Adjust wheels as follows: With vehicle on level ground and full weight of vehicle resting on wheels, turn wheels straight ahead.
11. See Figure 1-2. Using a carpenter's square, place against side of wheel, adjust wheels so they are perpendicular to the ground.

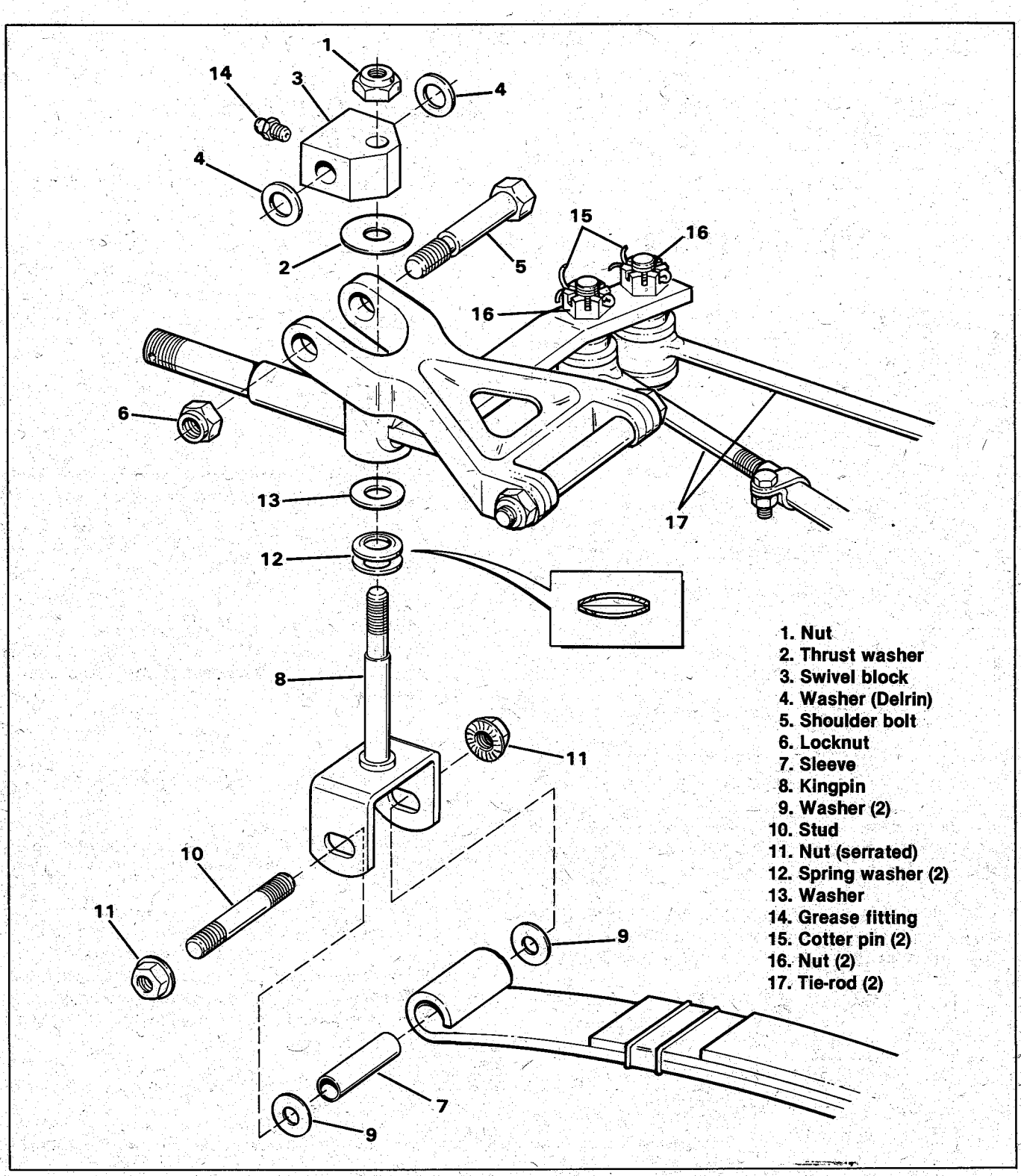

Figure 1-1. Kingpin Assembly — Exploded View

12. See Figure 1-1. Tighten shackle nuts (11) snug to ensure that adjustment remains fixed when removing wheels to apply final torques to nuts (11).

13. Raise car and remove wheels.

14. Tighten one serrated nut (11) to 35-40 ft-lbs (4.8-5.5 kgm) torque.

NOTE

Torque reading must be taken on one nut only to ensure correct tightening of assembly and to maintain correct adjustment.

15. Reinstall wheel and lower car. Recheck camber adjustment.

16. Reconnect battery cables.

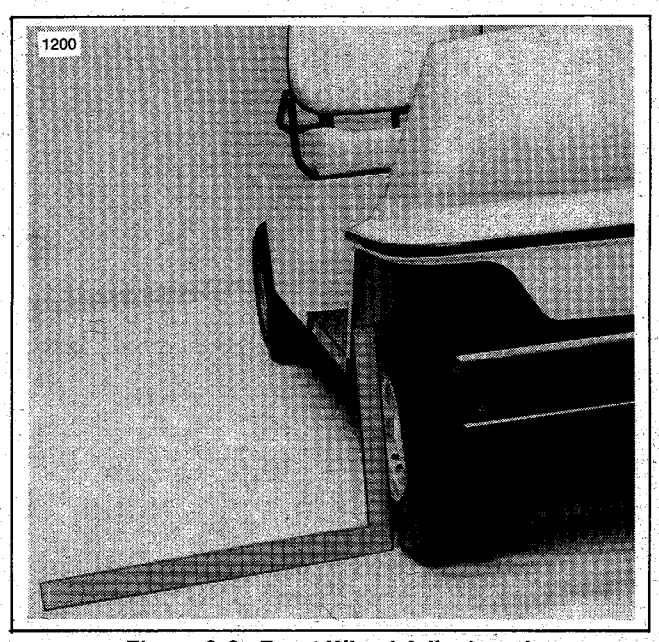

Figure 2-2. Front Wheel Adjustment

NOTES

SEATS

Removal (Figure 1-3)

1. Remove bolts and locknuts (1) and hinge retainers (2).

2. Remove seat.

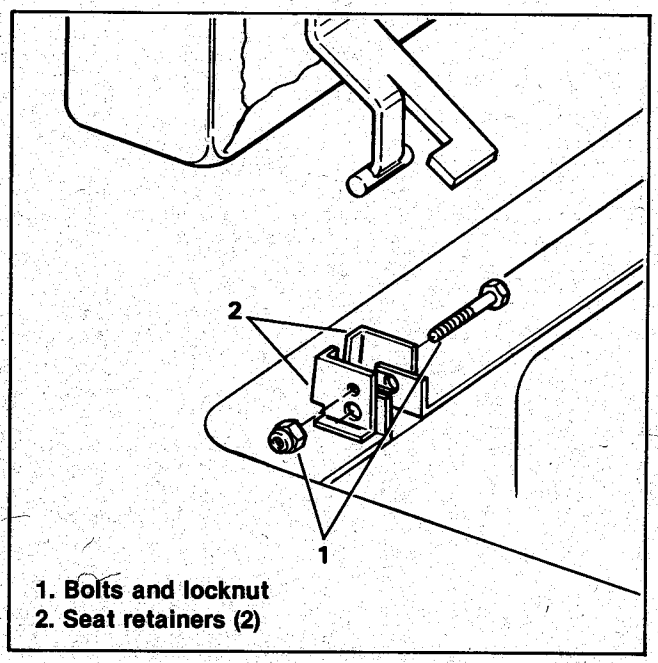

Figure 1-3. Seat Mounting Hardware

Installation (Figure 1-3)

1. Position seats in hinges, and install retainers (2).

2. Install bolts and locknuts (1). Tighten locknuts to 8-10 ft-lbs (1.2 kgm) torque.

SEAT LATCHES

Removal (Figure 1-4)

1. Remove the two bolts, locknuts and washers. Pull latch out.

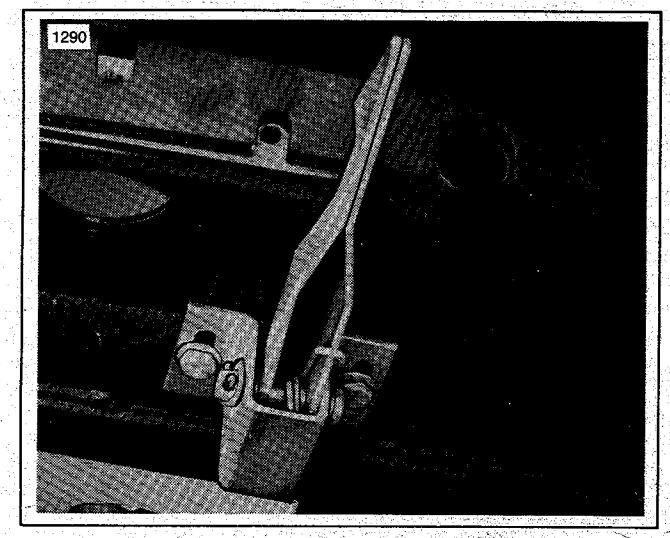

Figure 1-4. Seat Latch Adjustment Bolts

Installation (Figure 1-4)

1. Install the two bolts, locknuts and washers.

2. Tighten seat latch bracket bolts to 8-10 ft-lbs (1.2 kgm) torque.

Adjustment (Figure 1-4)

1. The seat latch adjustment must be made with the body on the car and the seats at rest.

2. Slightly loosen seat latch bolts and slide seat latch up or down to achieve 1/8 in. (3.2 mm) clearance between latch and seat frame.

NOTE

If vehicle is equipped with seat brake, allow proper seat latch clearance for seat plunger actuation. With plunger in highest position (lockout knob disengaged), adjust seat latch to retain seat frame. Latch hook must be approximately 1/8 in. off seat frame. Adjust seat latch accordingly and tighten nuts.

3. Tighten seat latch bracket bolts to 8-10 ft-lbs (1.2 kgm) torque.

NOTES

BRAKES 2

	Page No.
1. General Information	2-1
2. Brake Cable and Pucks	2-5
3. Brake Disc	2-9

GENERAL INFORMATION

FOOT BRAKE

The golf car is equipped with a disc type brake featuring a self-adjusting caliper. When the brake pedal is depressed, it transmits a clamping action to the brake pucks in the caliper through the spring capsule and brake cable assembly. The brake pucks apply this clamping action against the brake disc attached to the traction motor armature shaft, thus stopping the car.

PARKING BRAKE

To lock the brake for parking, tilt pedal forward and depress far enough to engage the locking tooth. Tilting the brake pedal rearward or depressing the accelerator pedal will automatically release the brake. This feature provides a parking brake by simply tilting the brake pedal and also prevents any possible damage by automatically releasing the brake when the accelerator is depressed.

BRAKE PUCK WEAR LIMIT

Brake pucks and cable should be replaced when either puck is worn to the scribe mark on the puck (Figure 2-1).

LUBRICATION

Brake caliper pins should be cleaned and lubricated annually with Harley-Davidson ANTI-SEIZE, Part No. 99632-77.

WARNING

Do not allow ANTI-SEIZE to contact brake pucks or disc, or stopping action will be impaired.

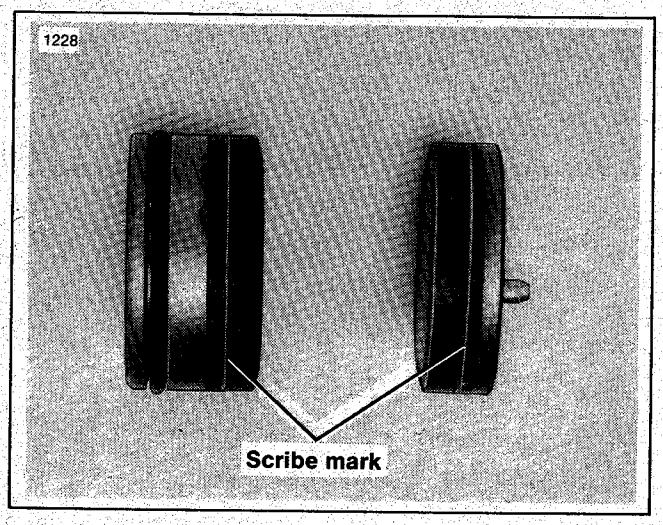

Figure 2-1. Brake Puck Wear Limit

ADJUSTMENTS

General

Although the brake caliper is self-adjusting, the relationship between the caliper and the disc along with brake cable length should be checked periodically and adjusted if necessary.

CAUTION

Before performing brake adjustment, check rear wheel alignment and correct if necessary. See REAR WHEEL ALIGNMENT.

Brake Cable Length (Figure 2-2)

NOTE

Brake cable length, once set, will not vary. Perform this adjustment during initial set-up or after brake cable and puck replacement.

1. Pull the rubber boot (1) back along brake cable.
2. Loosen jamnut (2).
3. Turn cable adjuster (3) to eliminate any cable slack.

NOTE

Cable slack is free movement of cable sheath with no inner cable movement.

WARNING

To avoid accidental start-up of a car and possible personal injury, disconnect batteries before working on vehicle. Remove the 2 negative battery cables, which run to the Master Drive assembly, from the batteries.

Front of Car

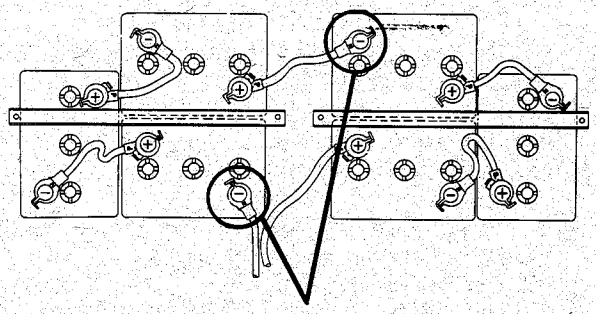

Remove these battery cables before working on car.

4. When slack is eliminated, turn cable adjuster (3) out (counterclockwise) two full turns.

5. Hold cable adjuster (3) and tighten jamnut (2) against caliper body.

6. Slide rubber boot (1) over cable adjuster (3).

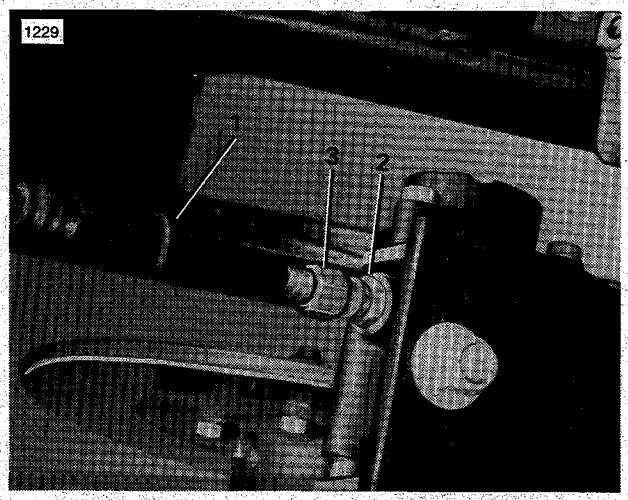

1. Rubber boot
2. Jamnut
3. Cable adjustment

Figure 2-2. Brake Cable Length Adjustment

Brake Pad Gap

Pump the brake pedal to the floor 20 times. This action enables the self-adjusting caliper to adjust the brake pad gap.

Brake Bracket

WARNING

The brake bracket adjustment is very important because if the pucks are allowed to ride too high on the disc a BRIDGE will be formed that could prevent adequate braking, see Figure 2-3. If brake pucks are worn due to this condition they should be replaced.

1. Slightly loosen brake bracket bolts (1, Figure 2-4) and motor bracket bolts (2, Figure 2-4).

2. Position brake caliper 1/8 in. above brake disc hub surface (Figure 2-5).

3. Snug brake bracket bolts (1, Figure 2-4) and motor brace bracket bolts (2, Figure 2-4).

4. Lock parking brake and slightly loosen brake caliper mounting nuts (1, Figure 2-6).

5. With the caliper locked in this position with the parking brake, adjust brake caliper mounting bracket (2, Figure 2-6) until a clearance of .125 in.

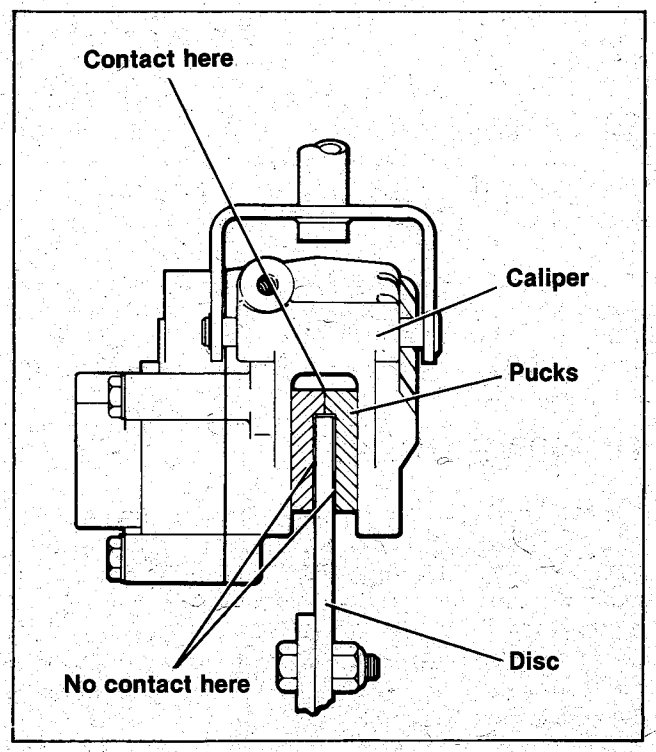

Figure 2-3. Brake Puck Wear Due to Improper Brake Bracket Adjustment

(2.6 mm) is achieved between the caliper and the bracket (Figure 2-6).

NOTE

If correct clearance cannot be achieved by moving bracket, loosen set screws on brake hub and move hub on motor shaft. Tighten brake hub set screws to 90-100 in-lbs torque.

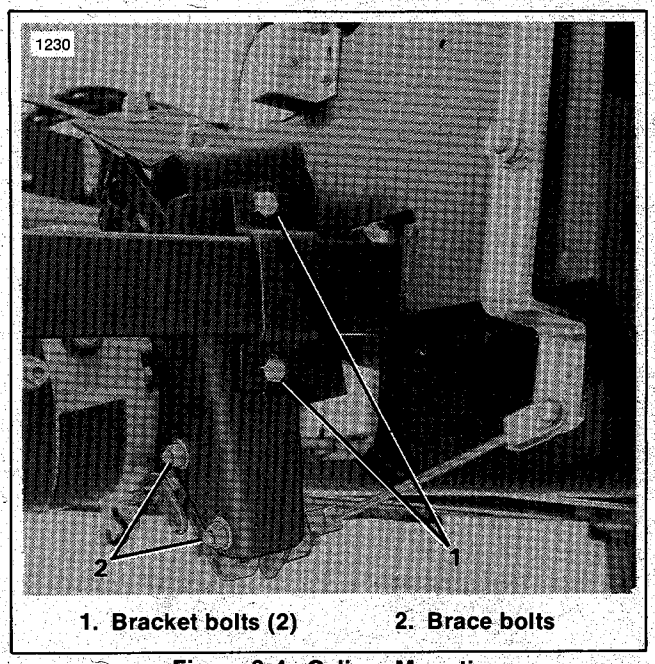

1. Bracket bolts (2)
2. Brace bolts

Figure 2-4. Caliper Mounting

6. Tighten brake bracket bolts (1, Figure 2-4) to 16-19 ft-lbs (2.2-2.6 mm) torque while holding brake bracket tightly against swing arm.

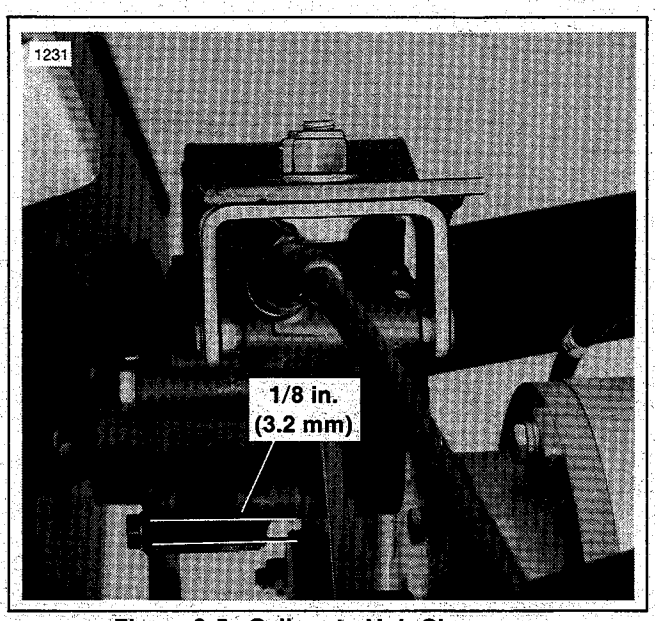

Figure 2-5. Caliper to Hub Clearance

7. Tighten motor brace bracket bolts (2, Figure 2-4) to 16-19 ft-lbs (2.2-2.6 mm) torque.

8. Tighten brake caliper mounting nuts (1, Figure 2-6) to 31 ft-lbs torque and release parking brake.

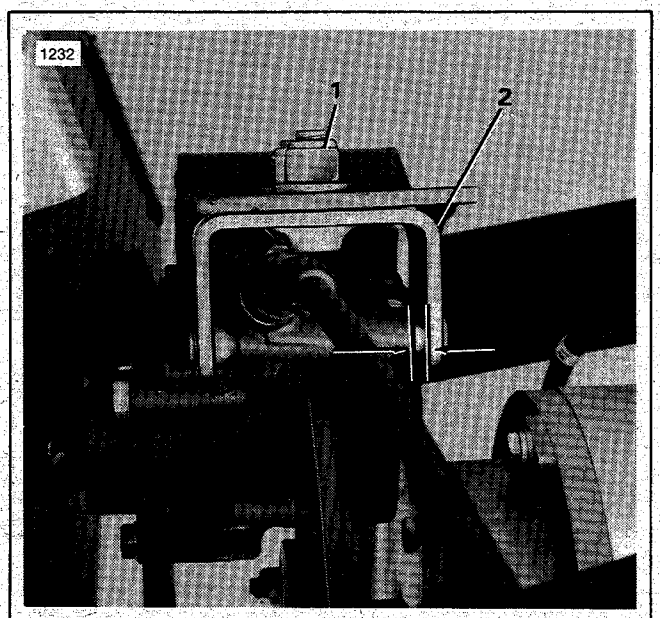

1. Nut
2. Brace

Figure 2-6. Caliper to Bracket Clearance

NOTE

With brackets secure, caliper should move back and forth freely on caliper pins approximately .030 in. If caliper is not free, re-position brake disc assembly or brackets.

Brake Ratchet and Pawl

The ratchet and pawl adjustment establishes the point at which the parking brake is released when the accelerator pedal is depressed. This adjustment is critical to proper brake and speed switch operation. The parking brake should release when the speed switch wiper arm is squarely on the second contact of the speed switch.

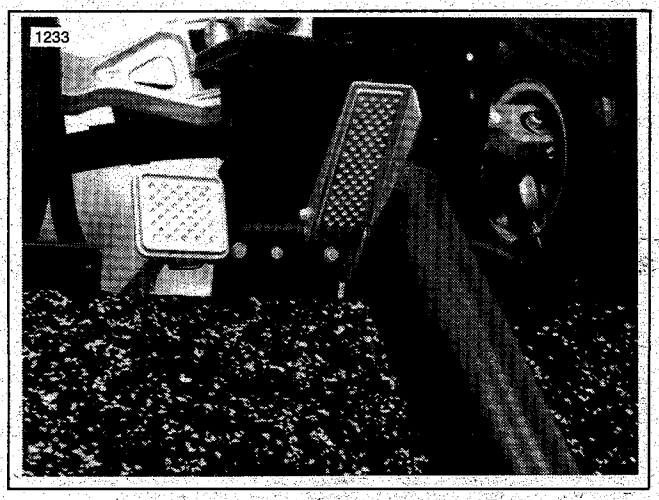

Figure 2-7. Accelerator Bracket Bolts

1. Slightly loosen the three accelerator pedal bracket bolts (Figure 2-7).

2. Hold pawl perpendicular to floorboard with carpenters square (Figure 2-8). Depress brake pedal and adjust the accelerator bracket until pawl engages ratchet notch about half way. Snug the three accelerator bracket bolts (Figure 2-7).

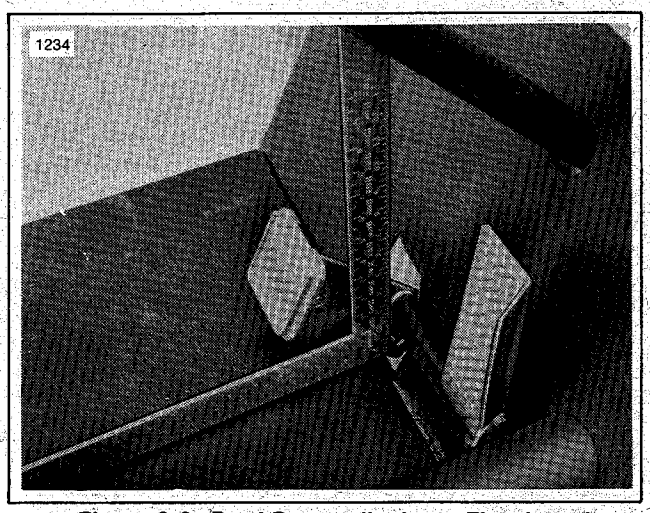

Figure 2-8. Pawl Perpendicular to Floorboard

3. With the parking brake locked, depress accelerator pedal while observing speed switch wiper arm. Parking brake must release when speed switch wiper arm is squarely on second contact of speed switch (Figure 2-9). If the wiper arm is not in correct position when brake releases, it will be necessary to readjust accelerator pedal bracket.

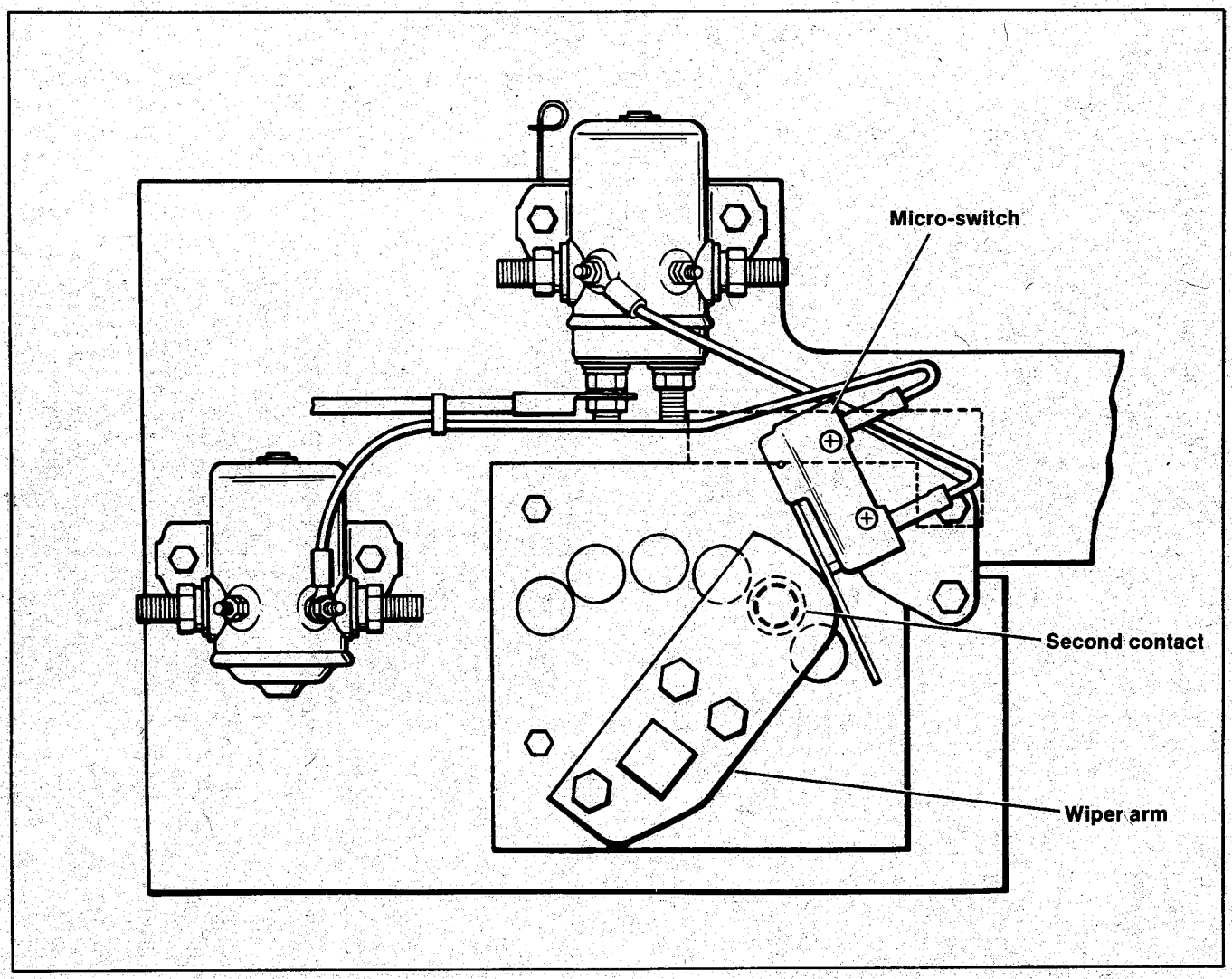

Figure 2-9. Speed Switch Position when Parking Brake Releases

NOTE

Both relationships, ratchet and pawl and speed switch, must be achieved simultaneously through adjustment of the accelerator bracket.

4. Tighten accelerator bracket bolts (Figure 2-7) to 16-19 ft-lbs torque.

5. With the ratchet and pawl properly adjusted, check to see that the speed switch wiper arm is fully seated against its stop in the rest position.

6. See Figure 2-10. To adjust the at rest position of the wiper arm, disconnect accelerator rod (1) from pedal. Loosen locknut (2) and turn rod (1) in or out of rod end (3) as necessary for proper adjustment.

7. Tighten jamnuts (2, Figure 2-10).

8. Recheck brake release and readjust as needed.

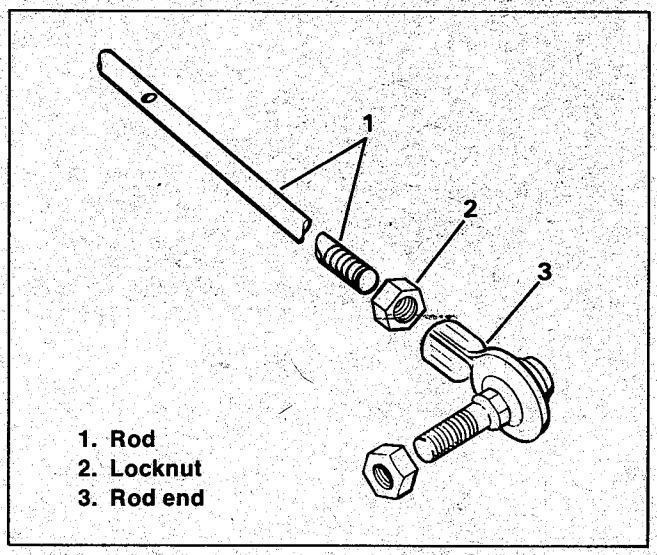

Figure 2-10. Accelerator Rod End

BRAKE CABLE AND PUCKS

WARNING

To avoid accidental start-up of a car and possible personal injury, disconnect batteries before working on vehicle. Remove the 2 negative battery cables, which run to the Master Drive assembly, from the batteries.

Front of Car

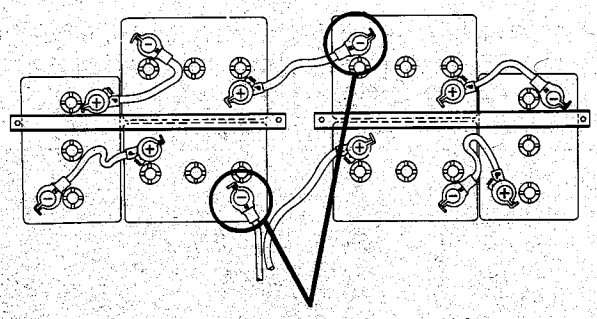

Remove these battery cables before working on car.

REMOVAL

NOTE

The brake cable and brake pucks must be replaced as a set to ensure brake system integrity. Kit is Part No. 42617-78.

1. From under car, disconnect the two cable return springs (1, Figure 2-11) from the spring capsule.

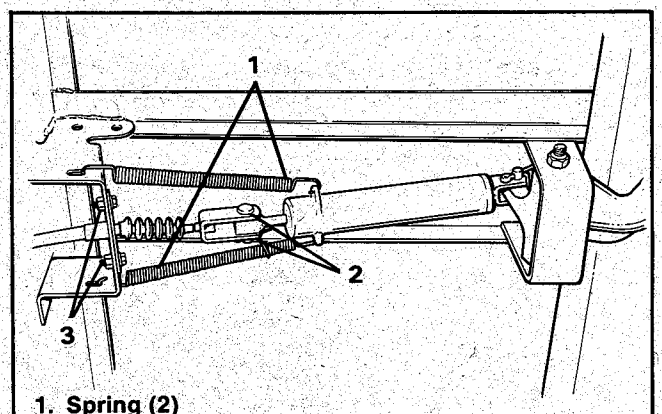

1. Spring (2)
2. Cotter pin and clevis pin
3. Bolts, nuts and lockwashers

Figure 2-11. Brake Cable that is Secured with Two Bolts, Washers and Locknuts

2. Remove cotter pin and clevis pin (2, Figure 2-11) releasing the brake cable from the spring capsule.

3. Remove the two bolts, washers and locknuts (3, Figure 2-11) that secure cable and plate to cable stop bracket and remove cable.

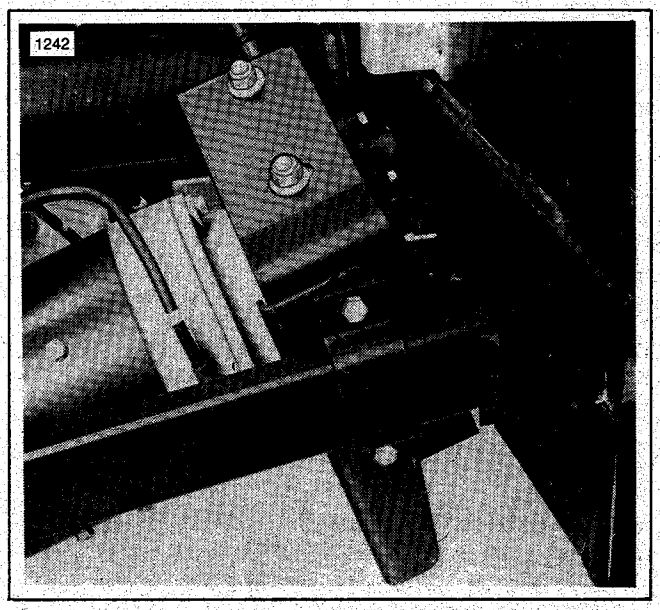

Figure 2-12. Brake Bracket Bolts

4. Cut the cable strap and bend open the cable guide which both hold the cable to the frame.
5. From top of car, bend open cable guide on top of speed switch board and remove cable.
6. Remove the two brake bracket bolts (Figure 2-12) and remove caliper support bracket with caliper and cable attached.
7. Remove the two caliper mounting nuts and separate caliper from caliper support bracket.

DISASSEMBLY

1. Remove the three caliper cover bolts (Figure 2-13).

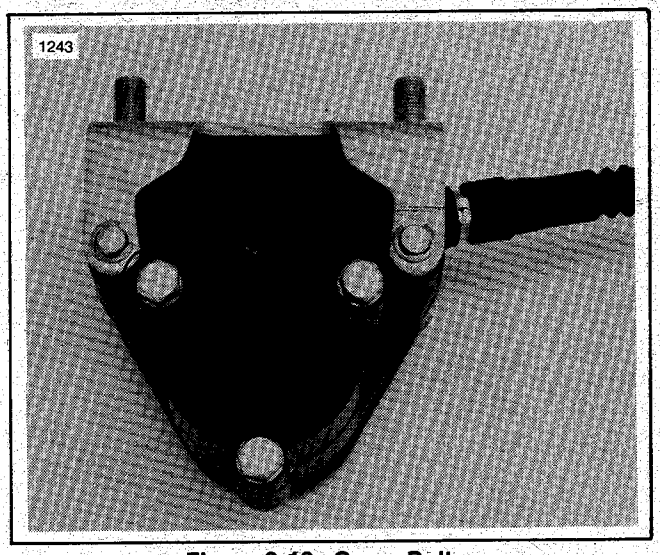

Figure 2-13. Cover Bolts

2. Remove cover (1, Figure 2-14) and cover gasket (2, Figure 2-14). Self-adjuster spring (3, Figure 2-14) will stay in cover.

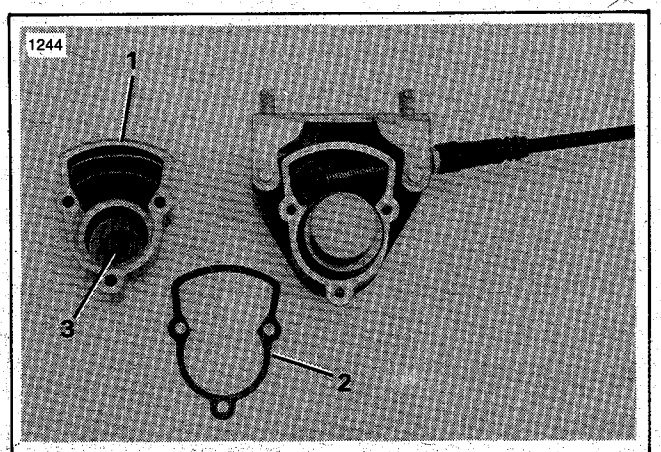

1. Cover
2. Locknut
3. Self-adjusting spring

Figure 2-14. Remove Cover

3. Reset self-adjuster by lifting out plastic ratchet adjuster and turning adjuster bolt counterclockwise with a screwdriver until it stops (Figure 2-15). This will fully seat the adjuster.

4. Push rubber boot off of cable adjuster, loosen cable adjuster jamnut and unscrew cable adjuster from caliper.

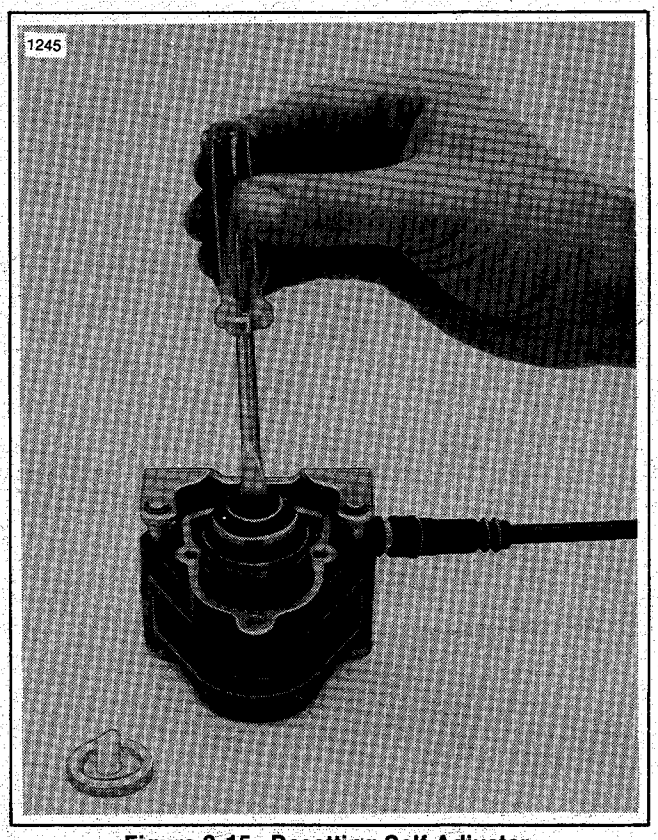

Figure 2-15. Resetting Self Adjuster

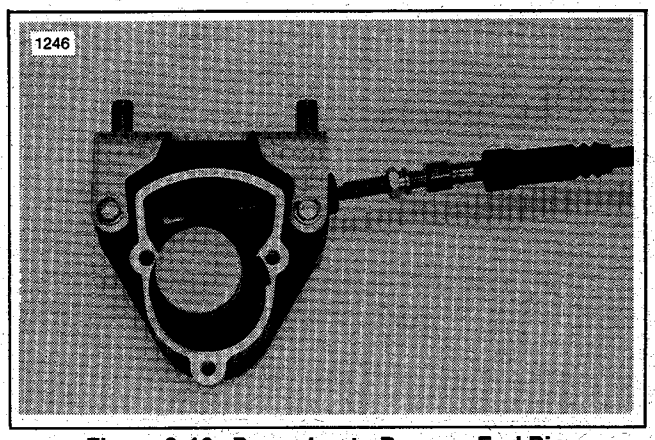

Figure 2-16. Preparing to Remove End Pin

5. Lift ratchet gear and arm assembly from floating brake puck and turn assembly so cable protrudes through cable end pin (Figure 2-16).

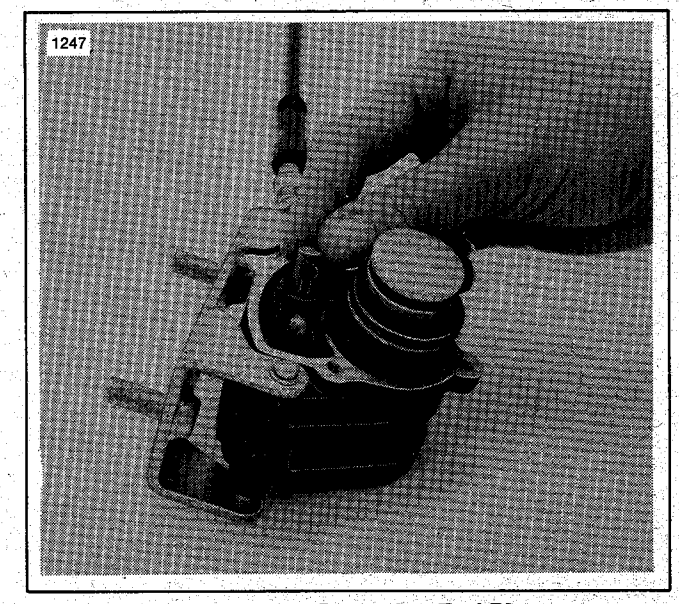

Figure 2-17. Removing End Pin

6. Lift cable end pin from brake arm and cable (Figure 2-17). Removing ratchet gear assembly and remove cable from caliper.

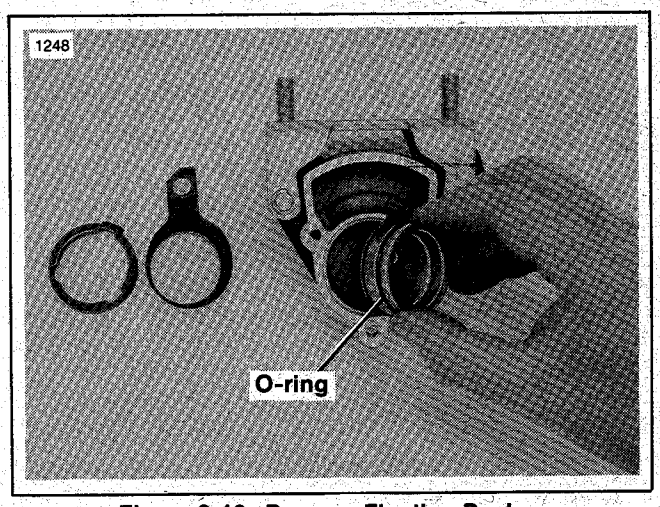

Figure 2-18. Remove Floating Puck

7. Remove floating brake puck from caliper. Note O-ring on floating brake puck (Figure 2-18).

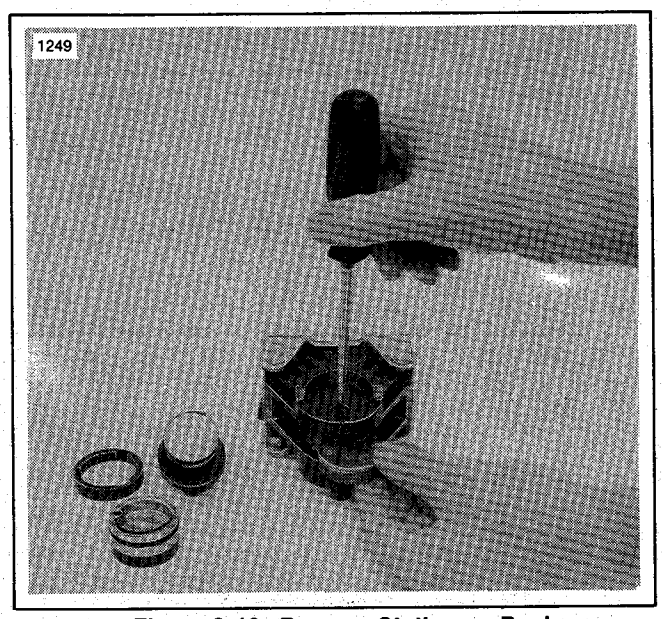

Figure 2-19. Remove Stationary Puck

8. Turn caliper over, push pinion stationary brake puck through rubber grommet and remove stationary brake puck (Figure 2-19).

CLEANING AND LUBRICATION

1. Remove E-rings (1, Figure 2-20) and clean caliper pins (2, Figure 2-20). Lubricate caliper pins (2, Figure 2-20) with Harley-Davidson ANTI-SEIZE, Part No. 99632-77 and reinstall in caliper.

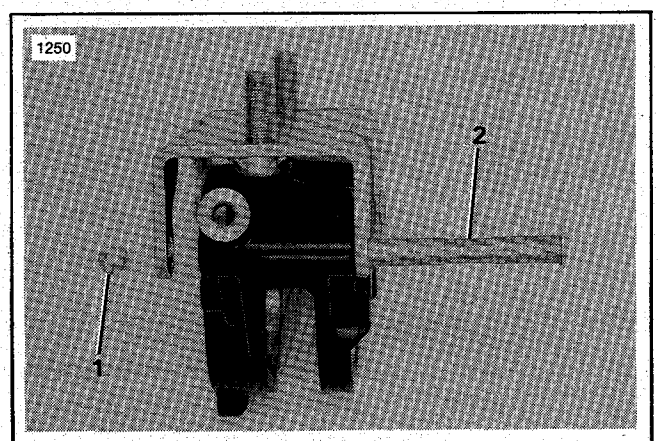

1. E-ring
2. Pin

Figure 2-20. Lube Caliper Pins

2. Clean ratchet gear assembly and lubricate at points shown in Figure 2-21 with all purpose grease.
3. Clean caliper cover and lubricate self-adjusting spring (Figure 2-22) with all purpose grease.

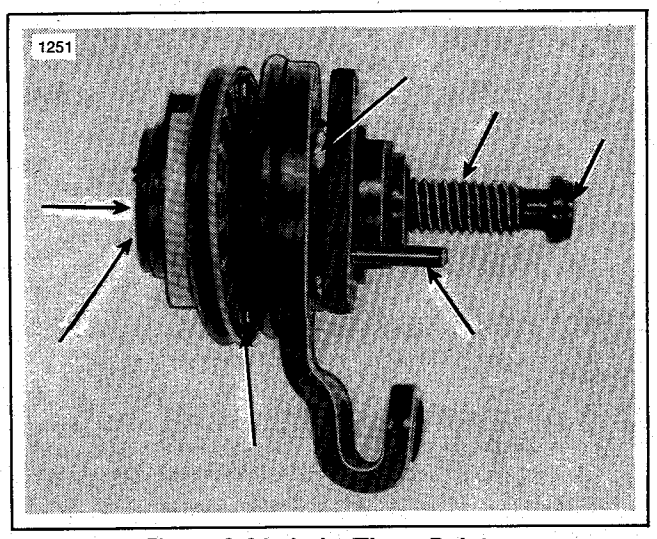

Figure 2-21. Lube These Points

4. Lubricate mounting pin (1, Figure 2-23) on new stationary brake puck, center of new floating brake puck and O-ring on floating brake puck. Use all purpose grease.

WARNING

Do not allow grease to contact brake puck friction surface, or stopping action will be impaired.

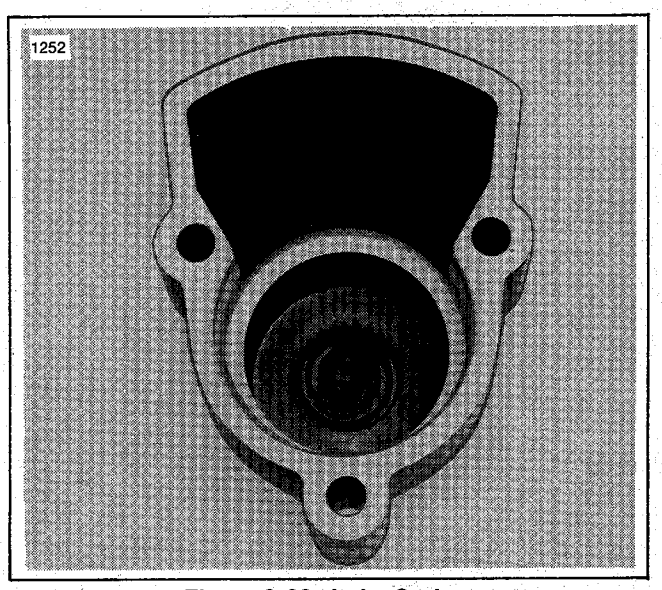

Figure 2-22. Lube Spring

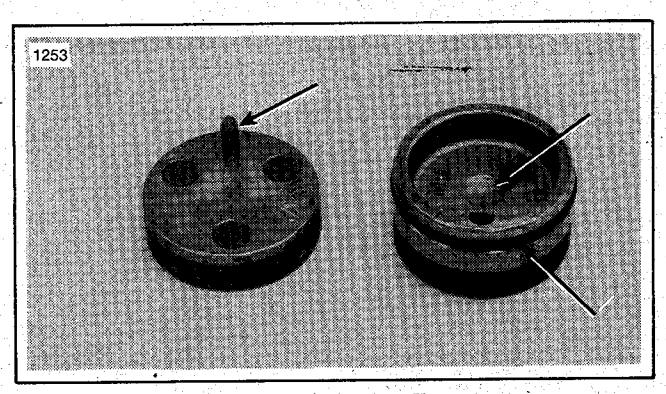

Figure 2-23. Lube These Points

ASSEMBLY

1. Install new stationary brake puck in caliper with pin through rubber grommet.

2. Install new floating brake puck in caliper. Be sure rubber O-ring is in place on puck.

3. Install new brake cable through hole in caliper.

4. Pull caliper end of cable as far as possible into caliper, and install brake arm over cable.

5. Install cable end pin through hole in brake arm and over cable (Figure 2-17). Pull back on cable until cable end is fully seated in cable end pin (Figure 2-24).

6. Install ratchet gear guide so its tang is engaged in notch of caliper.

7. Install ratchet gear assembly lining up three tangs with notches in ratchet gear guide, and pin with hole in floating brake puck.

8. Screw cable adjuster into caliper until cable slack is taken up.

9. Check to be sure self-adjuster is fully seated (Step 3 in DISASSEMBLY.)

10. Install cover gasket and cover with cover screws.

INSTALLATION

1. Secure caliper support bracket to caliper with two caliper mounting nuts. Do not tighten mounting nuts.

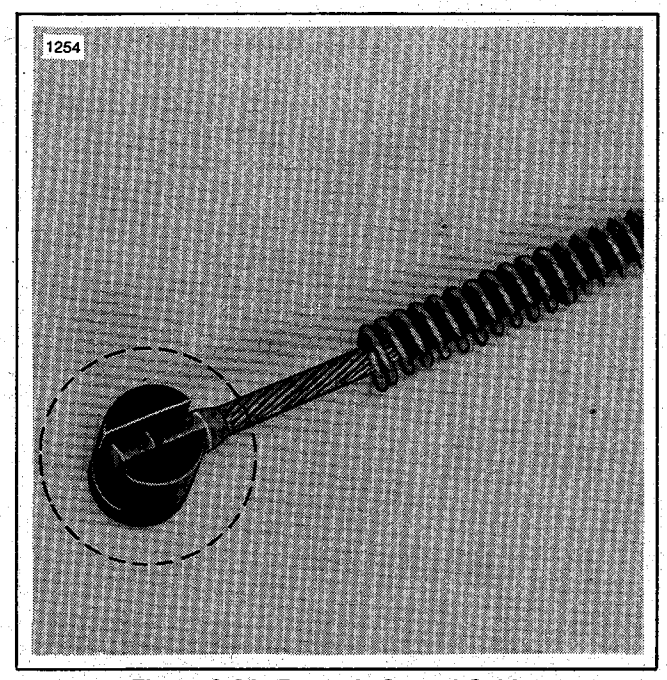

Figure 2-24. Properly Seated Cable

2. Install caliper support bracket with caliper and cable attached. Secure with brake bracket and bolts (Figure 2-12).

3. Route cable through open cable guide on top of speed switch board, and close cable guide.

4. From under car, secure cable to frame by replacing cable strap and closing cable guide around cable.

5. Secure cable and plate to cable stop bracket using two bolts, washers and locknuts (3, Figure 2-11).

BRAKE DISC

WARNING

To avoid accidental start-up of a car and possible personal injury, disconnect batteries before working on vehicle. Remove the 2 negative battery cables, which run to the Master Drive assembly, from the batteries.

Front of Car

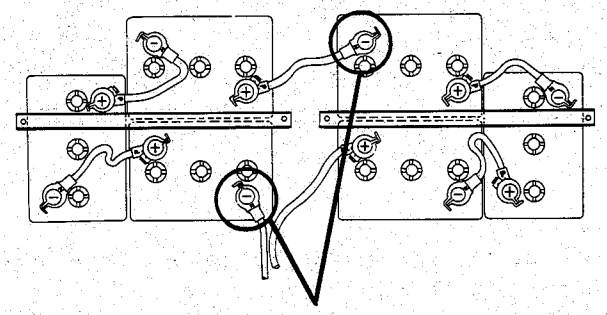

Remove these battery cables before working on car.

CHECKING BRAKE DISC RUNOUT

It is recommended, but not necessary, to remove the body to gain access to the brake disc.

1. Attach dial indicator base to brake mounting bracket or traction motor.

2. Place contact point of dial indicator on disc friction surface as close as possible to outside edge and rotate disc one complete revolution. Maximum allowable runout is .005 in. (.127 mm). Runout in excess of specification indicates loose, worn or damaged disc, bent motor armature shaft or worn armature shaft bearings. Brake discs with excessive runout should be replaced.

REMOVAL

It is recommended, but not necessary, to remove body to gain access to brake disc.

NOTE

In most cases the traction motor will have to be removed from differential assembly to facilitate removal of the brake disc.

1. Remove the two bolts which secure brake bracket to swing arm, and remove bracket and brake caliper together (Figure 2-25).

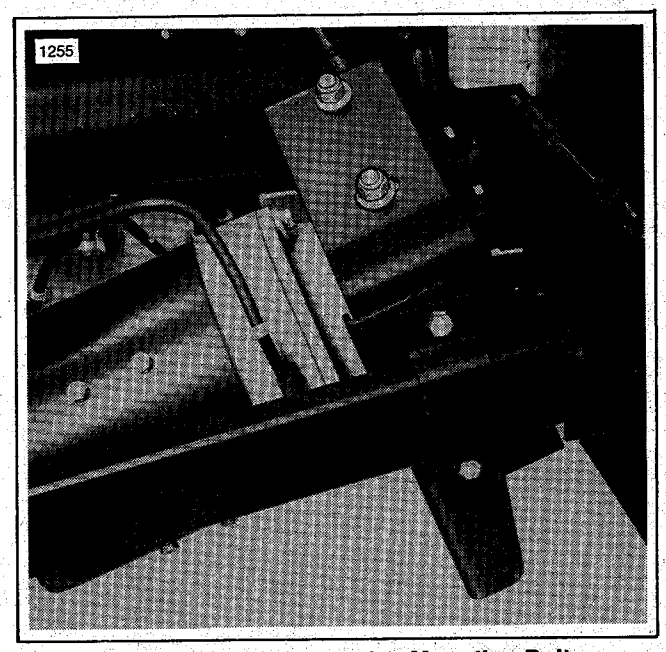

Figure 2-25. Brake Bracket Mounting Bolts

2. Loosen the two brake disc hub set screws (Figure 2-26).

3. Mark traction motor and motor end cover for reference when reassembling. Mark traction motor wires before removing.

4. Remove end cover bolts, and remove traction motor from end cover (Figure 2-27).

5. Pull brake disc and hub assembly from traction motor with Harley-Davidson TWO JAW PULLER, Part No. 97292-61.

INSTALLATION

1. Clean and deburr traction motor armature shaft with Harley-Davidson CLEANING SOLVENT, Part No. 99631-77, and emery cloth.

2. Check condition of key and replace with new key if necessary.

3. Coat traction motor armature shaft with Harley-Davidson RETAINING COMPOUND, Part No. 99628-77, and install disc and hub assembly onto shaft. Shaft should extend 1/32 in. (.8 mm) past hub on front of motor.

4. Tighten two set screws (Figure 2-26) to 96-120 in-lbs (6.7-8.4 kgc) torque.

5. Install traction motor to end cover, aligning reference marks.

6. Install end cover bolts (Figure 2-27) and tighten to 90-100 in-lbs (6.3-7 kgc) torque.

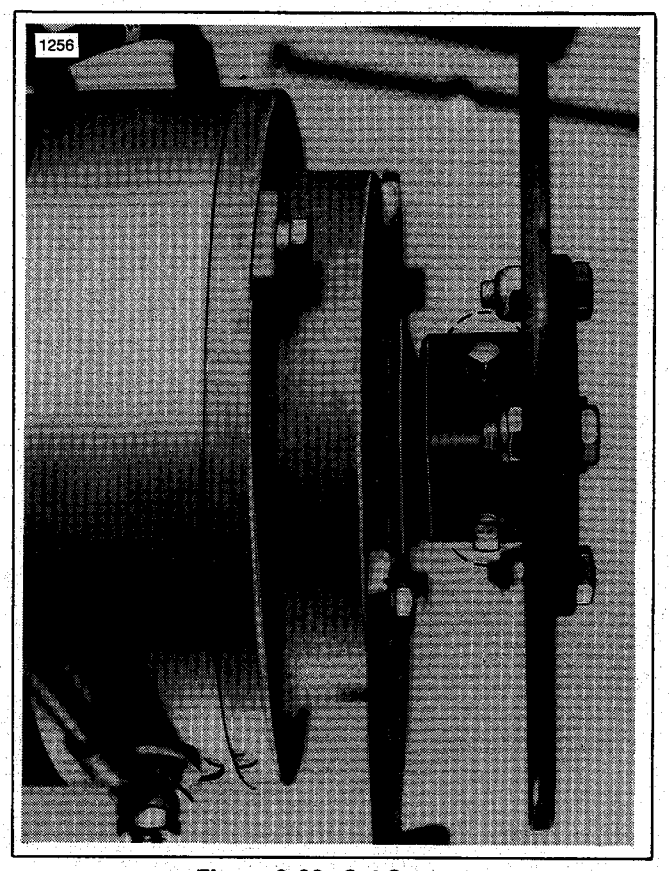

Figure 2-26. Set Screws

7. Install caliper over disc and loosely bolt brake bracket to swing arm.

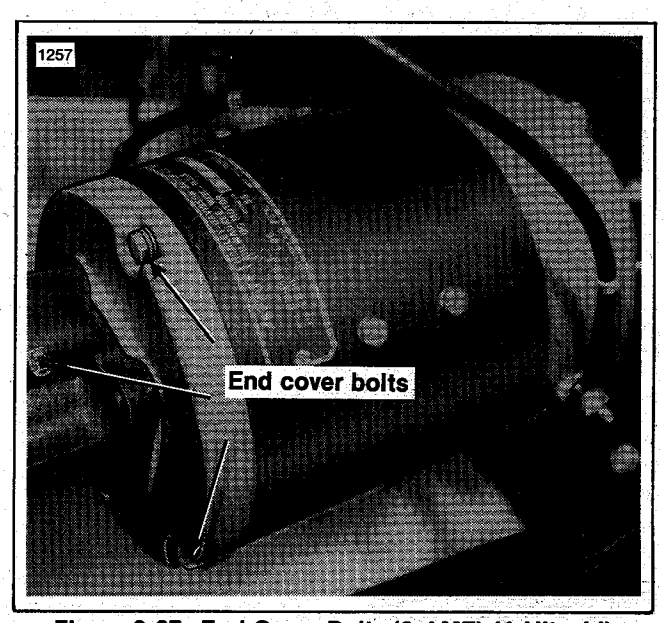

Figure 2-27. End Cover Bolts (3-AMF) (4-Hitachi) (AMF Shown)

8. Adjust brake brackets and caliper as described under ADJUSTMENTS.

NOTE

Brake adjustments should be promptly completed prior to set up of RETAINING COMPOUND (Step 3) in case disc must be repositioned on shaft to accomplish adjustments.

ELECTRICAL 3

1. Specifications 3-1
2. Micro-Switch 3-3

SPECIFICATIONS

TRACTION MOTOR

Model	G.E.
Type	Series wound, reversible
Rating	2 H.P. @ 2800 R.P.M., 36 volts
Brushes	
Minimum length	.750 (3/4) in. (19mm)
Brush spring tension	1-2 lbs. (.5-1.0 kg) ± 10%
Commutator	
Minimum diameter	2.625 in. (66.7mm)
Under cut depth	.031 (1/32) in. (.8mm)
Runout after finishing	.001 in. (.025mm) maximum
Resistance — Field coil	.018 ohms at 68°F (20°C)
Resistance — Armature	.021 ohms at 68°F (20°C)

Model	AMF
Type	Series wound, reversible
Rating	2 H.P. @ 2800 R.P.M., 36 volts
Brushes	
Original length	1.375 (1-3/8) in. (35mm)
Minimum length	.75 (3/4) in. (19mm)
Brush spring	
Free length	1.5 (1-1/2) in. (38.1mm) maximum
Tension	1.6 lbs ± 10%
Commutator	
Original diameter	2.870 in. (73mm)
Minimum diameter	2.745 in. (70mm)
Under cut depth	.031 (1/32) in. (.8mm)
Runout after finishing	.001 in. (.025mm) maximum
Resistance — Field coil	.012 ohms at 77°F

HITACHI
(Replacement Only)

Model	Hitachi
Type	Series wound, reversible
Rating	2 H.P. @ 2800 R.P.M., 36 volts
Brushes	
Original length	1.42 (19/64) in. (29mm)
Minimum length	.512 (1/2) in. (13mm)
Brush spring tension	1-2 lbs. (.5-1.0 kg) ± 10%
Commutator	
Original diameter	3.543 in. (90mm)
Minimum Diameter	3.465 in. (88mm)
Under cut depth	.031 (1/32) in. (.8mm)
Runout after finishing	.001 in. (.025mm) maximum
Resistance — Field Coil	.017 ohms at 68°F (20°C)
Resistance — Armature	.020 ohms at 68°F (20°C)

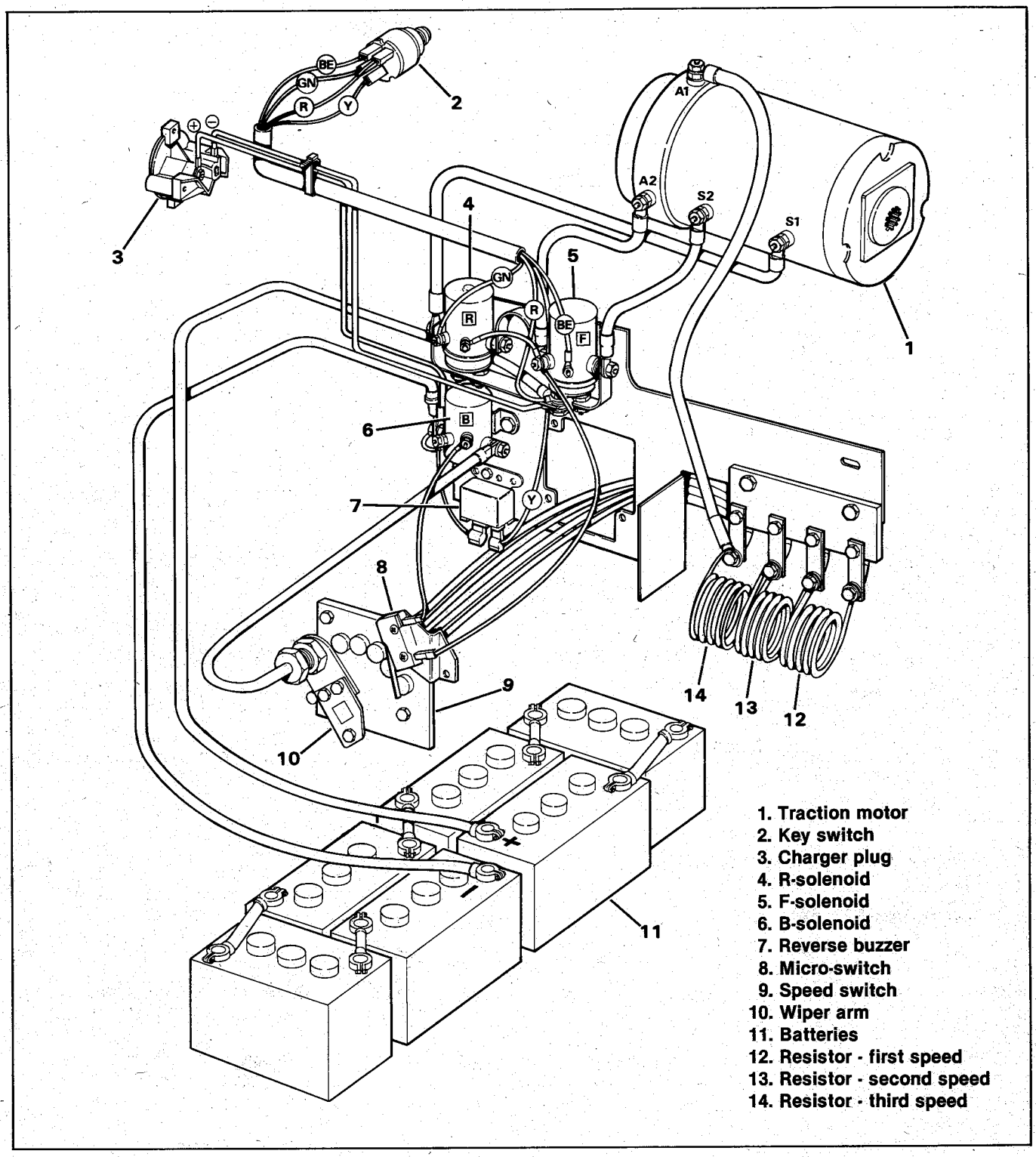

Figure 3-1. Wiring Layout

MICRO-SWITCH

GENERAL INFORMATION

The micro-switch must close (click) when the brush is centered on the second contact. Also the parking brake must disengage before the micro-switch closes. See Figure 3-2.

ADJUSTMENT (Figure 3-2)

1. Disconnect accelerator rod return spring.
2. Position the speed switch brush completely on the second contact button and hold in this position.
3. Pivot the micro-switch bracket assembly toward the speed switch brush arm until micro-switch (clicks) closes.
4. The proper adjustment of the micro-switch to close the circuit is very critical. The switch should close the circuit only after the wiper arm is completely on the second contact button.
5. With micro-switch adjusted, tighten switch mounting bolts securely.
6. Reconnect accelerator rod and return spring.
7. Test operation by depressing accelerator pedal.

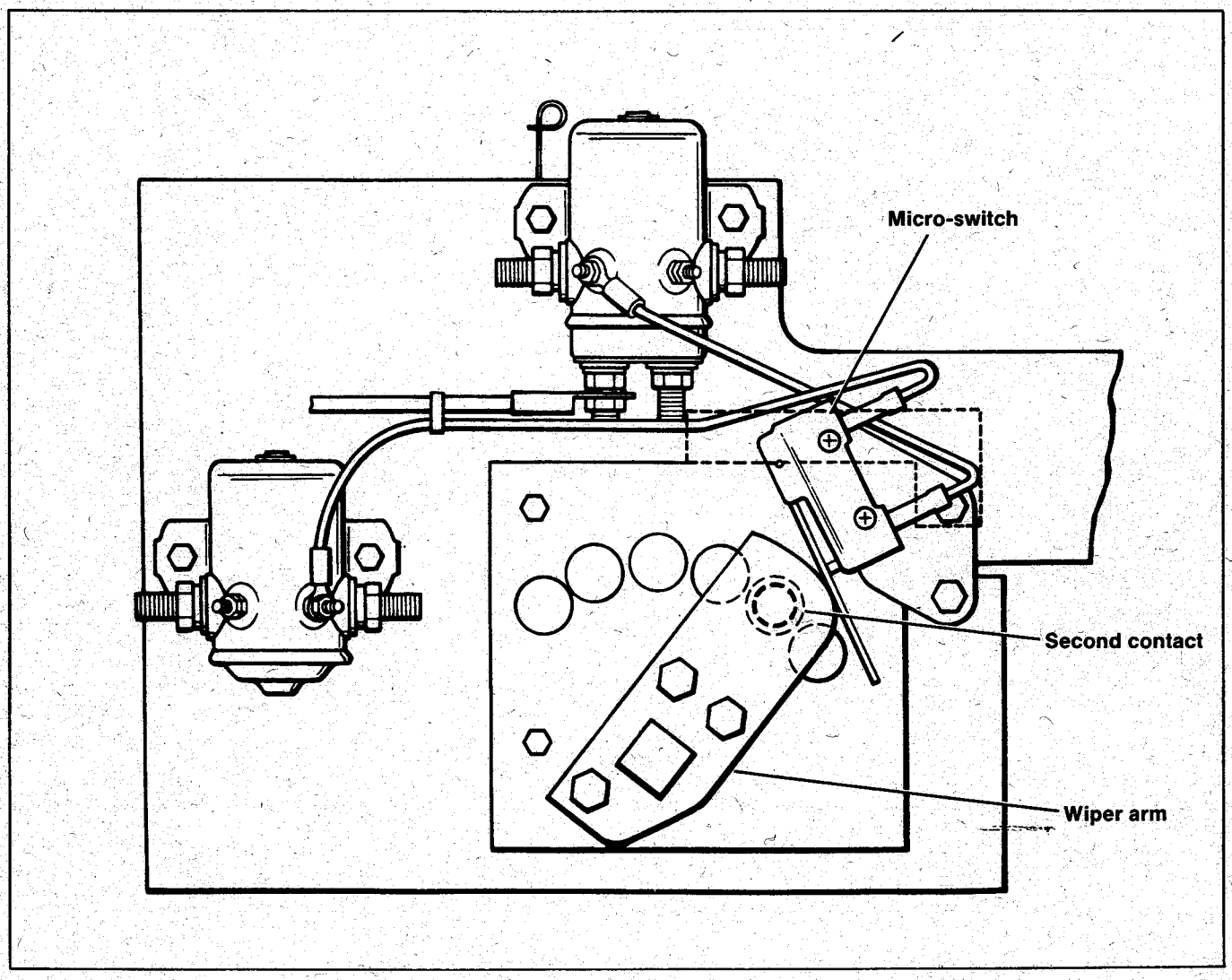

Figure 3-2. Micro-Switch Adjustment

NOTES

AMF
Harley-Davidson
Milwaukee, Wisconsin 53201