Par Car

Service Manual

1989
GASOLINE ParCar/Utilitruck
ELECTRIC ParCar/Utilitruck

Issued: May 1989

Part No. 99496-89

FOREWORD

This service manual has been prepared with two purposes in mind. First, it will acquaint the reader with the construction of Columbia ParCar vehicles and assist him in performing basic maintenance and repair. Secondly, it will introduce to the professional Columbia ParCar mechanic the latest field-tested and factory-approved major repair methods. We sincerely believe that this manual will make your association with Columbia ParCar vehicles more pleasant and profitable.

In addition to the information given in this Service Manual, Service Bulletins are issued to Columbia ParCar Dealers from time to time, which cover interim engineering changes and supplementary information. Service Bulletins should be consulted for complete information on the models covered by this manual.

PREPARATION FOR SERVICE

Proper preparation is very important for efficient service work. A clean work area at the start of each job will allow you to perform the repair as easily and quickly as possible, and reduce the incidence of misplaced tools and parts. A golf car that is excessively dirty should be cleaned before work starts. Cleaning will occasionally uncover trouble sources. Tools, instruments and parts needed for the job should be gathered before work is started. Interrupting a job to locate tools or parts is a needless delay. Special tools required for a job are listed at the end of each section.

MODEL IDENTIFICATION

Always give the vehicle identification number when ordering parts or making inquiries about your ParCar or Utilitruck.

The ParCar vehicle identification number is located on a metal tag on the right side seat support gusset. The Utilitruck vehicle identification number is located on right spring support. The engine serial number is located on top of the engine housing, Figure 1.

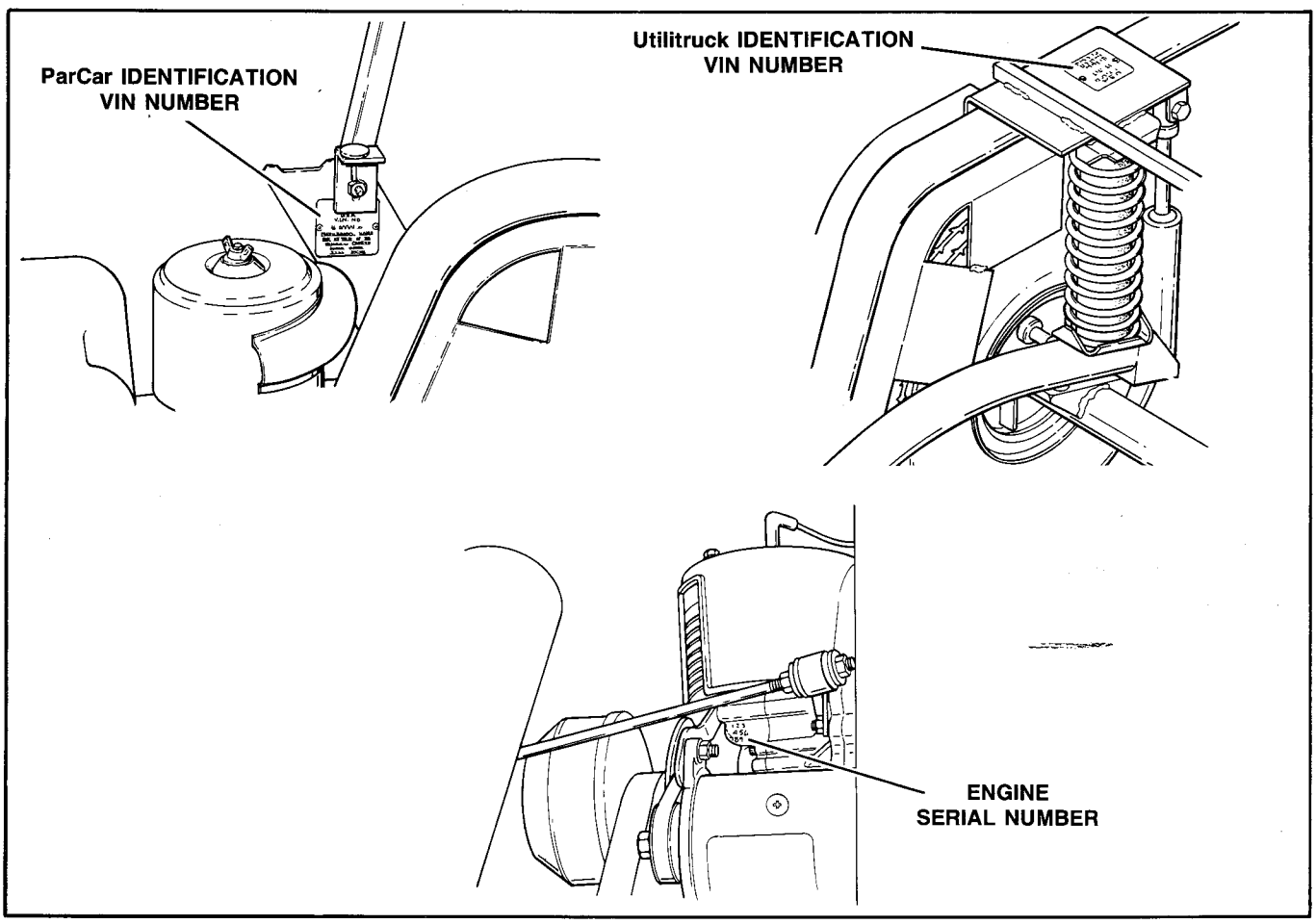

Figure 1 – Engine and Model Identification

USE GENUINE REPLACEMENT PARTS

WARNING

When replacement parts are required, use only genuine Columbia parts or parts with equivalent characteristics including type, strength and material. Failure to do so may result in product malfunction and possible injury to the operator and/or passenger.

To ensure a satisfactory and lasting repair job, follow the service manual instructions carefully and use only genuine Columbia ParCar replacement parts. This is your insurance that the parts you are using will fit right, operate properly and last longer. When you use genuine Columbia ParCar parts, you use the best.

PRODUCT REFERENCES

When reference is made in this manual to a specific brand name product, tool or instrument, an equivalent product, tool or instrument may be used in place of the one mentioned.

WARNINGS AND CAUTIONS

Statements in this manual preceded by the words WARNING or CAUTION and printed in bold face are very important.

WARNING

Means there is the possibility of personal injury to yourself and others.

CAUTION

Means there is the possibility of damage to the vehicle.

We recommend you take special notice of these items.

WARNING

Gasoline is extremely flammable and highly explosive under certain conditions. Always stop engine, and do not smoke or allow open flame or sparks when refueling or servicing the fuel system.

WARNING

Working on heavy Columbia ParCar vehicles without following proper procedures and using proper lifting equipment may result in vehicle damage or personal injury.

WARNING

Safety procedures are essential. A running golf car or Utilitruck must be worked on with greatest care. Avoid spinning clutch, belts and wheels. Use caution and common sense.

WARNING

The modification of Columbia ParCars for use in other than golf play is not recommended.

Exceeding ParCar load capacities, recommended speed or altering the ParCar for other than golf play may result in possible injury or property damage.

WARNING

Proper service and repair is important for the safe, reliable operation of all mechanical products. The service procedures recommended and described in this service manual are effective methods for performing service operations. Some of these service operations require the use of tools specially designed for the purpose. These special tools should be used when and as recommended.

It is important to note that some warnings against the use of specific service methods which could damage the vehicle or render it unsafe are stated in this service manual. However, please remember that these warnings are not all inclusive. Since Columbia ParCar could not possibly know, evaluate and advise the service trade of all possible ways in which service might be done or of the possible hazardous consequences of each way, we have not undertaken any such broad evaulation. Accordingly, anyone who uses a service procedure or tool which is not recommended by Columbia ParCar must first thoroughly satisfy himself that neither his nor the operator's safety will be jeopardized by the service methods selected.

TABLE OF CONTENTS

TABLE OF CONTENTS (Cont'd.)

TABLE OF CONTENTS (Cont'd.)

SECTION 1
GENERAL VEHICLE INFORMATION

SPECIFICATIONS

GENERAL FEATURES

Automatic transmission with reverse and governed forward speed adjustable up to a maximum of 12 mph (19.4 kph).

Turning Radius (measured from turning center to center of outside tire tread)

P4G, P4E, G4S & E4S	8'
GU4 & EU4	12'

Clearance Radius

P4G, P4E, G4S & E4S	10'
GU4 & EU4	13.8'

Brakes

Drum brakes on each rear wheel mechanically operated. Brake pedal incorporates ratchet lock with spring loaded linkage compensating for brake shoe wear, with automatic release controlled by accelerator pedal.

Power Transmission

Automatic variable-pitch V-belt transmission. Overall drive ratio variable from 10.4 to 38.2.

DIMENSIONS

	P4G	G4S
Wheelbase	63.5 in.	63.5 in.
Ground Clearance	4 in.	4 in.
Weight	655 lbs.	694 lbs.
Maximum Load Capacity	750 lbs.	750 lbs.
Overall Length	92.5 in.	94.62 in.
Overall Width	44.5 in.	44.25 in.
Overall Height	46 in.	47.5 in.

	P4E	E4S
Wheelbase	63.5 in.	63.5 in.
Overall Length	92.5 in.	94.62 in.
Overall Width	44.5 in.	44.25 in.
Overall Height	46 in.	47.5 in.
Ground Clearance	4 in.	4 in.
Weight		
w/o batteries	590 lbs.	629 lbs.
with batteries	938 lbs.	977 lbs.
Maximum Load Capacity	750 lbs.	750 lbs.

	EU4	GU4
Wheelbase	63.5 in.	63.5 in.
Ground Clearance	4 in.	4 in.
Weight	1143 lbs.	920 lbs.
Maximum Load Capacity*	800 lbs.	1000 lbs.
Gross Vehicle Weight (cargo area)	1643 lbs.	1720 lbs.
Overall Length	102.5 in.	102.5 in.
Overall Width	45.5 in.	45.5 in.
Overall Height	64 in.	47.5 in.

* including driver and passenger.

CAPACITIES

Fuel Tank	8 U.S. gals. (32.2 liters)(Approx.)
Oil Tank	3.5 U.S. qts. (3.3 liters)(Approx.)
Differential	24 oz. (710 cc)

Columbia ParCar Engine

Type	Reversible – two-cycle
Number of Cylinders	One
Cooling	Blower air-cooled
Mounting	Rubber
Bore	2.756 in. (70 mm)
Stroke	2.50 in. (64 mm)
Displacement	14.8 cu. (243 cc)
Compression Ratio (after port closing 6.0:1)	7.7:1
Air Cleaner	Dry-type
Spark Plug	
Type	Champion L95CY
Size	14 mm × 1/2" (12.78 mm) reach
Gap	.025 in. (.6 mm)
Torque	15-20 ft.-lbs. (2-2.7 kg/m)
Ignition Timing	19° .085 forward (2.16 mm) B.T.C.
Automatic Oil Injection	

FLUIDS AND LUBRICANTS

SAE 20W 20 engine oil for lubricating linkages.

High quality chassis grease for front suspension components.

API Service GL5 Multipurpose Gear Lubricant APG 90 for differential in gasoline models. Use SAE 30W oil in electric vehicles.

Columbia ParCar LUBRICANT (or a good quality 2-cycle oil, certified B.I.A.-TC-W) for oil injection.

TORQUES

Individual component torques are listed in the SPECIFICATIONS at the beginning of the respective section. When a specific fastener torque is not specified, use Table 1 as a guide in determining the proper torque.

Table 1

Torque to the values given in this table unless specified otherwise. Torque figures are in ft.-lbs.

FINE OR COURSE THREAD FASTENER	GRADE DESIGNATION	TENSILE STRENGTH MINIMUM	MATERIAL	SCREW, STUD, OR BOLT SHANK SIZE OR DIAMETER																
				2	3	4	5	6	8	10	1/4	5/16	3/8	7/16	1/2	9/16	5/8	3/4	7/8	1
CAP SCREW	S. A. E. 2 A. S. T. M. A-307 STEEL	64,000 P. S. I.	Low Carbon Steel								6	11	19	30	45	66	93	150	202	300
CAP SCREW	S. A. E. 3 STEEL	100,000 P. S. I.	Medium Carbon Steel								9	17	30	47	69	103	145	234	372	551
CAP SCREW	A. S. T. M A-449 S. A. E. 5 STEEL	105,000 P. S. I.	Medium Carbon Steel or Low Alloy Heat Treated								9	18	31	50	75	110	150	250	378	583
CAP SCREW	A.S.T.M.354BB STEEL																			
CAP SCREW	A.S.T.M. A-325 *														100		200	355	525	790
CAP SCREW	A. S. T. M. A-354-BC STEEL	125,000 P. S. I.	Low Alloy or Med. Carb. Quenched Tempered								11	20	34	54	81	119	167	269	427	644
CAP SCREW	S. A. E. 6 STEEL	133,000 P. S. I.	Med. Carbon Steel Quenched Tempered								12.5	24	43	69	106	150	209	350	550	825
CAP SCREW	S. A. E. 7 STEEL		Med. Carbon Alloy, quenched Tempered Roll Threaded																	
CAP SCREW	S.A.E. 8 STEEL	150,000 P. S. I.	Med. Carbon Alloy Quenched Tempered								13	28	46	75	115	165	225	370	591	893
CAP SCREW	A-354-BD. A490*	150,000 P. S. I.	Med. Carbon Alloy Quenched Tempered										55	90	138	198	270	444	709	1071

Foot Pounds to Kilogrameters

	0	1	2	3	4	5	6	7	8	9	
—		0·138	0·277	0·415	0·553	0·691	0·830	0·968	1·106	1·244	—
10	1·383	1·521	1·659	1·797	1·936	2·074	2·212	2·350	2·489	2·627	10
20	2·765	2·903	3·042	3·180	3·318	3·456	3·595	3·733	3·871	4·009	20
30	4·148	4·286	4·424	4·562	4·701	4·839	4·977	5·116	5·254	5·392	30
40	5·530	5·668	5·807	5·945	6·083	6·221	6·360	6·498	6·636	6·774	40
50	6·913	7·051	7·189	7·328	7·466	7·604	7·742	7·881	8·019	8·157	50
60	8·295	8·434	8·572	8·710	8·848	8·987	9·125	9·263	9·401	9·540	60
70	9·678	9·816	9·954	10·093	10·231	10·369	10·507	10·646	10·784	10·922	70
80	11·060	11·199	11·337	11·475	11·613	11·752	11·890	12·028	12·166	12·305	80
90	12·443	12·581	12·719	12·858	12·996	13·134	13·272	13·411	13·549	13·687	90

Table 2
Metric Conversion Table

MILLIMETERS to INCHES Millimeters (mm) x .03937 = Inches (in.)								INCHES to MILLIMETERS Inches (IN) x 25.4 = millimeters (mm)							
mm	IN	mm	IN	mm	IN	mm	IN	IN	mm	IN	mm	IN	mm	IN	mm
.1	.0039	25	.9842	58	2.283	91	3.582	.001	.025	.6	15.240	1 15/16	49.21	3 5/16	84.14
.2	.0078	26	1.024	59	2.323	92	3.622	.002	.051	5/8	15.875	2	50.80	3 3/8	85.72
.3	.0118	27	1.063	60	2.362	93	3.661	.003	.076	11/16	17.462	2 1/16	52.39	3.4	86.36
.4	.0157	28	1.102	61	2.401	94	3.701	.004	.102	.7	17.780	2.1	53.34	3 7/16	87.31
.5	.0197	29	1.142	62	2.441	95	3.740	.005	.127	3/4	19.050	2 1/8	53.97	3 1/2	88.90
.6	.0236	30	1.181	63	2.480	96	3.779	.006	.152	.8	20.320	2 3/16	55.56	3 9/16	90.49
.7	.0275	31	1.220	64	2.519	97	3.819	.007	.178	13/16	20.638	2.2	55.88	3.6	91.44
.8	.0315	32	1.260	65	2.559	98	3.858	.008	.203	7/8	22.225	2 1/4	57.15	3 5/8	92.07
.9	.0354	33	1.299	66	2.598	99	3.897	.009	.229	.9	22.860	2.3	58.42	3 11/16	93.66
1	.0394	34	1.338	67	2.638	100	3.937	.010	.254	15/16	23.812	2 5/16	58.74	3.7	93.98
2	.0787	35	1.378	68	2.677	101	3.976	1/64	.397	1	25.40	2 3/8	60.32	3 3/4	95.25
3	.1181	36	1.417	69	2.716	102	4.016	.020	.508	1 1/16	26.99	2.4	60.96	3.8	96.52
4	.1575	37	1.456	70	2.756	103	4.055	.030	.762	1.1	27.94	2 7/16	61.91	3 13/16	96.84
5	.1968	38	1.496	71	2.795	104	4.094	1/32	.794	1 1/8	28.57	2 1/2	63.50	3 7/8	98.42
6	.2362	39	1.535	72	2.834	105	4.134	.040	1.016	1 3/16	30.16	2 9/16	65.09	3.9	99.06
7	.2756	40	1.575	73	2.874	106	4.173	.050	1.270	1.2	30.48	2.6	66.04	3 15/16	100.01
8	.3149	41	1.614	74	2.913	107	4.212	.060	1.524	1 1/4	31.75	2 5/8	66.67	4	101.6
9	.3543	42	1.653	75	2.953	108	4.252	1/16	1.588	1.3	33.02	2 11/16	68.26	4 1/16	102.19
10	.3937	43	1.693	76	2.992	109	4.291	.070	1.778	1 5/16	33.34	2.7	68.58	4.1	104.14
11	.4331	44	1.732	77	3.031	110	4.331	.080	2.032	1 3/8	34.92	2 3/4	69.85	4 1/8	104.77
12	.4724	45	1.772	78	3.071	111	4.370	.090	2.286	1.4	35.56	2.8	71.12	4 3/16	106.36
13	.5118	46	1.811	79	3.110	112	4.409	.1	2.540	1 7/16	36.51	2 13/16	71.44	4.2	106.68
14	.5512	47	1.850	80	3.149	113	4.449	1/8	3.175	1 1/2	38.10	2 7/8	73.02	4 1/4	107.95
15	.5905	48	1.890	81	3.189	114	4.488	3/16	4.762	1 9/16	39.69	2.9	73.66	4.3	109.22
16	.6299	49	1.929	82	3.228	115	4.527	.2	5.080	1.6	40.64	2 15/16	74.61	4 5/16	109.54
17	.6693	50	1.968	83	3.268	116	4.567	1/4	6.350	1 5/8	41.27	3	76.20	4 3/8	111.12
18	.7086	51	2.008	84	3.307	117	4.606	.3	7.620	1 11/16	42.86	3 1/16	77.79	4.4	111.76
19	.7480	52	2.047	85	3.346	118	4.645	5/16	7.938	1.7	43.18	3.1	78.74	4 7/16	112.71
20	.7874	53	2.086	86	3.386	119	4.685	3/8	9.525	1 3/4	44.45	3 1/8	79.37	4 1/2	114.30
21	.8268	54	2.126	87	3.425	120	4.724	.4	10.160	1.8	45.72	3 3/16	80.96	4 9/16	115.89
22	.8661	55	2.165	88	3.464	121	4.764	7/16	11.112	1 13/16	46.04	3.2	81.28	4.6	116.84
23	.9055	56	2.205	89	3.504	122	4.803	1/2	12.700	1 7/8	47.62	3 1/4	82.55	4 5/8	117.47
24	.9449	57	2.244	90	3.543	123	4.842	9/16	14.288	1.9	48.26	3.3	83.82	4 11/16	119.06

GENERAL INFORMATION

SAFE OPERATING RULES

WARNING

Failure to comply with the Safe Operating Rules may result in bodily injury and property damage.

The basic rules of operation, combined with courtesy and common sense will help to make driving Columbia ParCar vehicles a safe and pleasant experience.

- Always drive vehicle straight up and down inclines to avoid overturning vehicle or losing vehicle stability and control. Be cautious while turning or backing up vehicle.
- Personal injury may result if arms, legs, or other parts of body are not kept inside vehicle while it is moving.
- Do not start vehicle until all occupants are seated. Remain seated while vehicle is in motion.
- Before leaving your seat, bring vehicle to a complete stop and lock parking brake to prevent vehicle from moving. If vehicle is to be left unattended, switch key OFF and remove key.
- Do not use accelerator to hold vehicle on an incline – use the brake.
- Make sure key is in position for desired direction of travel before depressing accelerator. DO NOT CHANGE DIRECTION OF SWITCH WHILE VEHICLE IS MOVING!

ParCars

- ParCars are to used for golf play only.
- It is hazardous to use golf cars anywhere other than on designated car paths and car areas.
- This vehicle is designed for transporting no more than two golfers and their equipment. Never exceed load capacity or vehicle stability and control will be endangered.

Utilitrucks

- Utilitrucks are designed to transport no more than two people unless adequate provisions have been made for additional passengers.
- Never exceed load capacity (1000 lbs.) or vehicle stability will be endangered.
- Always properly distribute and secure loads.

CONTROLS AND OPERATION (Figure 2)

Simple controls make it easy to operate a ParCar or Utilitruck. To drive, turn key to desired direction of travel and depress accelerator. Depress brake pedal to slow or stop.

WARNING

Be sure directional key switch is in desired position before depressing accelerator.

Directional Key Switch

The switch requires a key to operate. Turn key to FORWARD position to run vehicle forward. Turn to REVERSE position to run vehicle in reverse. Warning buzzer sounds when in reverse. Key can only be removed when in the OFF position. Switch locks automatically when key is removed.

Accelerator

Accelerator pedal starts the vehicle automatically when depressed. Further movement of pedal operates vehicle at desired speed. To slow or stop vehicle depress brake.

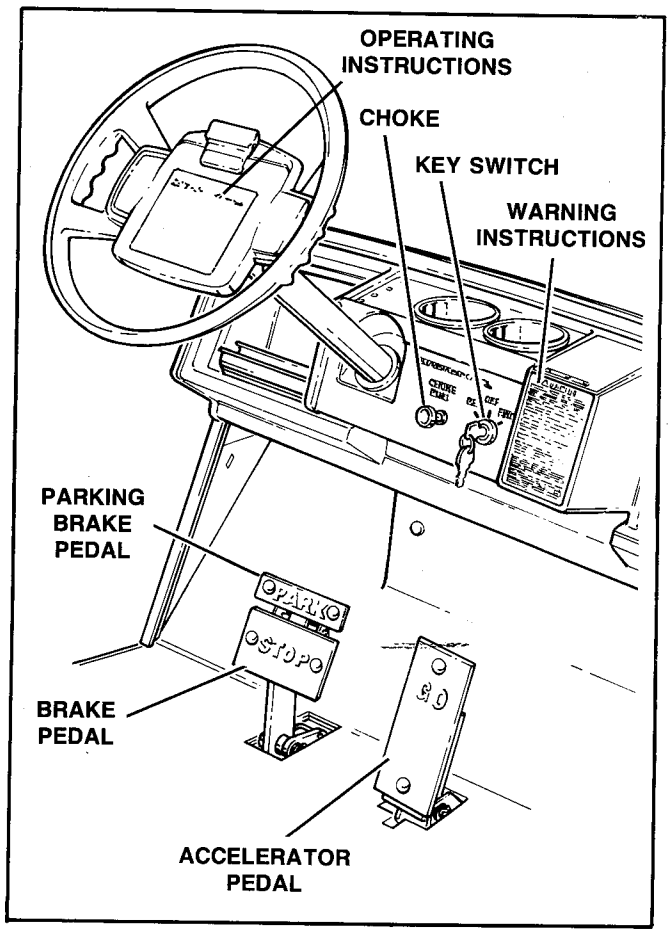

Figure 2 – Operating Controls

Brake

Depress brake pedal to slow or stop vehicle. To lock brake for parking, depress top of parking brake pedal. Parking brake remains applied until automatically released by depressing accelerator pedal.

Choke (Gasoline Powered Vehicles)

Use choke knob on panel to assist starting a cold engine, if necessary. Pull knob outward to choke and release as engine starts up.

LIFTING INSTRUCTIONS (Figure 3)

WARNING

Use extreme caution lifting or working on lifted vehicle. Vehicle should be on a flat, hard and level surface when lifting.

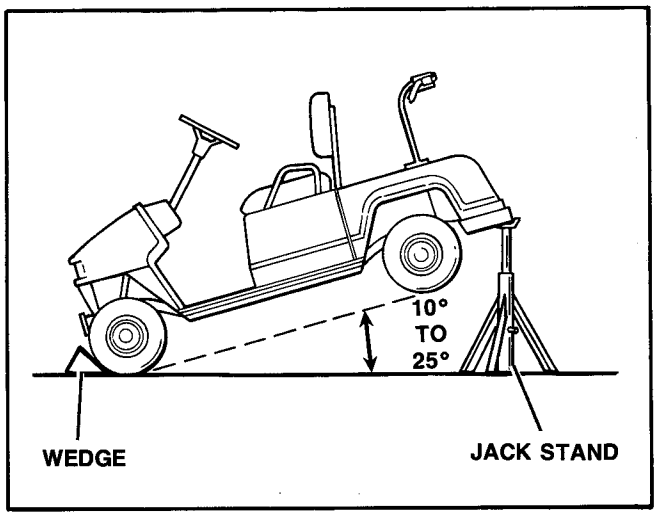

Figure 3 – Lifting Vehicle

When lifting the vehicle for service, use a sturdy lifting device such as a hoist or floor jack. Wedge wheels of vehicle to keep it from rolling. When using a floor jack, lift only on sturdy parts under the vehicle. After the vehicle is lifted to a 10° to 25° angle, place jack stands under bumper to support vehicle weight for added safety.

STORAGE

Engine (Gasoline Powered Vehicles)

Drain carburetor bowl and add a quality fuel stabilizer to the fuel following the manufacturer's recommendations on the container.

WARNING

Gasoline is extremely flammble and highly explosive under certain conditions. Do not smoke or allow open flame or sparks anywhere in the area when refueling or servicing the fuel system.

Battery

With battery fully charged, store battery in as cold a place as possible. If stored above 50°F (27°C), check state of charge every 8 to 10 weeks, and recharge if necessary.

Tires

Check condition of tires and inflate to 18 psi.

SERVICE

SERVICING A NEW ParCar OR Utilitruck

Before a new vehicle is put into operation, make a predelivery inspection and service check to see that vehicle is in good operating condition. Again, after 30 days, make another check to be sure that vehicle remains in good operating condition and to uncover any minor misadjustments or conditions in the early stages before any serious trouble can develop.

Service operations should be performed by a qualified Columbia ParCar Dealer.

INITIAL SERVICE CHECKS

ACCELERATOR PEDAL – inspect for secure mounting. Check for ease of operation and return.

STEERING WHEEL – install with front wheels straight ahead, install steering wheel with one spoke at bottom. Torque mounting nut to 40-50 ft.-lbs. (5.5-6.9 kgm).

BAG RACK – install and fully secure rack with supplied hardware.

SEAT – check and secure mounting bolts and seat cushion studs.

BRAKE – inspect brake actuation and parking brake locking. Brake should lock in upper most ratchet tooth for extended service life.

ALL WHEELS – inspect for properly torqued lug nuts.

TIRES – inflate tires to 18 psi for proper inflation.

BATTERIES – check electrolyte level and change condition.

CHASSIS, BODY AND WIRING CONNECTIONS – check tightness of all nuts, bolts and screws including directional key switch.

DRIVING AND SAFETY SUGGESTIONS – check that driving techniques and safety suggestions in Owner's Manual were explained to customer.

WARNING LABELS – check that all vehicle warning and operating labels are attached.

OWNER'S MANUAL – check that Owner's Manual is delivered to customer with vehicle.

WARRANTY – check that terms and conditions of warranty were explained to customer and that warranty registration has been completed and sent to factory.

Gasoline Powered Vehicles

TIGHTNESS OF ALL NUTS, BOLTS AND SCREWS, specifically:

— cylinder head bolts
— carburetor mounting
— air cleaning mounting
— engine mounting
— transmission mounting
— axles
— exhaust system and clamps
— directional key switch

THROTTLE – check for smooth operation, throttle plate fully open only with pedal depressed to floorboard.

CHOKE – check for smooth operation and full travel.

CARBURETOR – check adjustment.

STARTER-GENERATOR AND REGULATOR – check system operation.

IGNITION TIMING – check and adjust if necessary.

OIL INJECTION PUMP – check adjustment.

SPEED – set at 3150 rpm governed full speed.

FUEL LINES, OIL LINES AND FITTINGS – check for proper routing and clearance with exhaust pipe and other vehicle components (fittings and lines must not show leakage).

FUEL – fill fuel tank with sufficient fuel for delivery. Oil injection fill oil tank with sufficient oil for delivery.

Electric Powered Vehicles

TIGHTNESS OF ALL NUTS, BOLTS AND SCREWS, specifically:

— drive motor
— axles
— directional key switch

SPEED SWITCH – check for correct operation of vehicle and make any necessary readjustment.

REGULAR SERVICE INTERVALS

Gasoline Powered Vehicles

The following maintenance and lubrication operations are to be performed regularly after new vehicle checks have been made.

EACH TIME FUEL TANK IS FILLED

1. Inspect air cleaner. Clean or replace as necessary.
2. Clean debris from air fan screen.
3. Check oil tank oil level.

MONTHLY, 24 HOURS OPERATING TIME OR 32 ROUNDS

1. Adjust brake shoes.
2. Check tire pressure.
3. Lubricate carburetor throttle lever and choke lever swivel blocks.
4. Lubricate brake, throttle and choke cable ends.

EVERY 6 MONTHS

1. Perform monthly service operations.
2. Check starter-generator belt tension.
3. Clean and gap spark plug electrodes (new plug is recommended for hard service).
4. Inspect air cleaner. Clean or replace as necessary.
5. Lubricate body hinges.
6. Check oil pump adjustment.
7. Check fuel filter and replace if necessary.

EVERY SEASON

1. Check module wire leads. Check ignition timing.
2. Inspect starter-generator brushes.
3. Check steering wheel free play and adjust as necessary.
4. Adjust idle speed stop screw.
5. Adjust governor to 3150 rpm.
6. Check lubricant in axle differential housing.
7. Clean, inspect and repack front wheel bearings.
8. Lubricate front suspension.
9. Lubricate the brake and accelerator pedal bearings.
10. Lubricate the brake linkage.
11. Clean steering slider block and channel. Lubricate with dry lubricant.
12. Check steering gear unit lubricant level.

STORAGE

See STORAGE, this section.

Electric Powered Vehicles

The following maintenance and lubrication operations are to be performed regularly after new vehicle checks have been made.

DAILY

Battery

1. Charge 7 hours for 9 holes.
2. Charge 12 hours for 18 holes or more.

WEEKLY

Batteries

1. Check electrolyte (never fill cells prior to charging).
2. Give batteries an extra 6 hours charge to equilize state of charge.
3. Clean tops as needed.
4. Wash underside of car.

MONTHLY

Check tire pressure (18 psi).

Adjust brakes

1. Inspect cables.
2. Pedal should be adjusted to give 3/4" pedal height.
3. Adjust cable if necessary.
4. Adjust drum brake if necessary.

Lubricate controls with dry type lubricant.

1. Body hinge.
2. Speed switch rod or cable.
3. Brake and accelerator pedal bushings.
4. Brake cable ends.

Check speed switch adjustment.

EVERY 6 MONTHS

Do each of the monthly services.

Check motor brushes and commutator.

Check tightness of all nuts and bolts.

Front suspension

1. Grease king pin assembly.
2. Grease steering arm assembly.
3. Grease steering shaft joints.

EVERY SEASON

Pack wheel bearings with waterproof bearing grease and tighten properly.

Check differential oil. Special oil for electric cars.

Check front alignment.

TROUBLESHOOTING

Gasoline Powered Vehicles

Your gasoline vehicle will operate a long time without repairs if it is given proper care and maintenance. The following troubleshooting chart will be helpful in locating operating difficulties, should they occur.

SYMPTOM	CAUSE
Engine starts hard.	Spark plug partially fouled or in poor condition.
	Check electronic ignition module or timing.
	Loose wire connection at coil.
	Defective ignition coil.
	Loose wire connection at module wires.
	Poor cylinder compression.
	Water or dirt in fuel system and/or carburetor. Dirty plugged fuel filter.
	Carburetor not adjusted correctly.
	Spark plug wire damaged.
Engine starts but runs irregularly or misses.	Spark plug partially fouled or in poor condition.
	Spark plug wire damaged.
	Check timing or module.
	Module worn or out of adjustment.
	Defective ignition coil.
	Timing out of adjustment.
	Loose wire connections at coil.
	Water or dirt in carburetor.
	Water or dirt in fuel system. Dirty plugged fuel filter.
	Gasoline tank vent plugged, and tank air bound.
	Carburetor improperly adjusted.
	Improper gas and oil mixture.
Engine fails to start.	Gasoline tank empty.
	Gasoline line or filter clogged.
	Fouled spark plug.
	Module out of adjustment or damaged.
	Loose wire connection at coil or circuit breaker.
	Engine flooded with gasoline as a result of overchoking.
	Defective ignition coil.
	Loose wires at coil from module.
	Starter-Generator drive belt slipping.
	Spark plug wire damaged.

SYMPTOM	CAUSE
Starter fails to operate.	Battery dead.
	Starting control circuit not operating.
	Starter-Generator defective.
	Starter-solenoid defective (not closing).
	Micro-switch open.
	Circuit breaker open.
	Directional key switch circuit defective.
Starter operates with key switch off.	Starter solenoid defective (contacts stuck closed).
	Micro-switch improperly adjusted.
	Defective directional key switch.
Spark plug fouls repeatedly.	The wrong type of spark plug for the kind of service or for type engine.
	Unsuitable gasoline or wrong fuel mixture.
	Ignition timing incorrect.
	Low battery.
	Spark plug wire damaged.
	Defective ignition coil.
Engine overheats.	Oil pump out of adjustment. Not enough oil.
	Oil flow restricted through filter.
	Exhaust port or pipe partially blocked by carbon.
	Ignition timing advanced or retarded.
	Fan screen plugged.
	Incorrect governor adjustment.
Engine detonates.	Unsuitable fuel.
	Heavy deposit of carbon on piston head and in combustion chamber.
	Spark plug of the wrong heat range for the type of service invloved.
	Defective spark plug.
	Incorrect ignition timing.
	Lean fuel mixture.
Engine preignites.	Excessive carbon deposit on piston head, or in combustion chamber.
	Too hot a spark plug for the kind of service, or type of engine.
	Unsuitable fuel.
	Oil pump out of adjustment. Not enough oil.
	Incorrect timing.

SYMPTOM	CAUSE
Engine shows loss of power.	Exhaust port, muffler or pipe plugged with carbon.
	Air cleaner blocked – clean or replace element.
	Timing incorrect.
	Governor not adjusted properly. Drive belt excessively worn.
Starter-generator does not charge battery.	Loose or broken wire in starter-generator circuit.
	Defective generator field coil.
	Brushes worn or commutator dirty.
	Drive belt slipping.
	Defective regulator.
	Defective battery.
Carburetor floods.	Inlet valve leaking, dirty, worn or damaged.
	Float damaged and filled with gasoline. Incorrect float level setting.
Transmission does not engage or disengage smoothly.	Defective drive belt.
	Secondary drive stuck open.
Brakes do not hold normally.	Brake improperly adjusted.
	Brake controls binding as result of improper lubrication or damage.
	Brake linings badly worn.
Excessive vibration.	Engine mounting bolts or nuts loose.
	Engine rubber mounts damaged or rivets loose.
	Misaligned exhaust system.
	Damaged belt.
	Stabilizer bar out of adjustment.

When an engine is not operating properly, the trouble in many cases is mistakenly attributed to the coil, when actually the spark plug is at fault. Remove the spark plug from the cylinder head and clean and regap the electrodes as described in Paragraph 42, SECTION 10, or replace.

Electric Powered Vehicles

The speed control system cannot function properly if the batteries are not fully charged and in good condition. Always test the batteries as a first step in diagnosing any electrical problem. Check connections of cables at each battery, at the solenoids and at the traction motor. Check plug at speed switch.

Test ride vehicle, if possible, or support vehicle with rear wheel off ground. Operate to identify exactly what the problem is and which of the four speeds are involved. Operate vehicle in both forward and reverse direction.

Suspect components can be identified by referring to the electrical operation and circuits in this section. The circuit description along with the wiring diagram will enable you to identify which components may be involved.

Refer to the following troubleshooting chart to help identify specific electrical problems.

SYMPTOM	CAUSE
Car will not charge.	Poor battery condition.
	Faulty charger.
	Faulty charger plug.
	Faulty receptacle.
No forward or reverse.	Faulty batteries or connections.
	Faulty key switch.
	Faulty speed switch.
	Faulty motor.
	Both "F" and "R" solenoid not functioning.
Forward OK, no reverse.	Faulty key switch.
	Solenoid "F" open between large bottom terminals.
	Solenoid "R" not energizing.
Reverse OK, no forward.	Faulty key switch.
	Solenoid "R" open between large bottom terminals.
	Solenoid "F" not energizing.
No 1st and 2nd, 3rd and 4th OK.	Resistor coil R2 broken.
No 1st and 3rd, 2nd and 4th OK.	Resistor coil R2 broken.
No 2nd and 4th, 1st and 3rd OK.	Solenoid C1 not energizing. No continuity between large side terminals of solenoid C1.
No 3rd and 4th, 1st and 2nd OK.	Solenoid C2 not energizing. No continuity between large side terminals.
No 4th – 1st, 2nd and 3rd OK.	Speed switch linkage out of adjustment preventing full travel of magnet arm.
Car continues to run in 1st with key in forward or reverse.	Speed switch linkage out of adjustment preventing magnet arm from returning to off position.
Car continues to run with key in off position.	"F" or "R" solenoid stuck in energized position.

SECTION 2
WHEELS, TIRES AND FRONT HUBS

SPECIFICATIONS

Type	High Flotation
Tire Size	8.50 × 8 Std.
Air Pressure	18 psi (1.2 atm), Front and Rear
Wheel Nuts	torque to 35-40 ft.-lbs. (4.8-5.5 kgm)

WARNING

ParCar with angle bag rack – to secure body upright and avoid possible personal injury through accidental closing of body, remove body hold-up rod from clip and insert into slot in body frame.

1. TIRE AND WHEEL ASSEMBLY

NOTE: Maximum tire life and good handling qualities are directly related to the care given wheels and tires. At regular intervals check for loose axle nuts and wheel mounting nuts and incorrect tire inflation. Also check for excessive freeplay in steering mechanism. Adjust steering mechanism if necessary per Paragraph 5, SECTION 3.

Removal

a. Remove hub cap and slightly loosen wheel rim mounting nuts.

b. Lift vehicle per LIFTING INSTRUCTIONS, SECTION 1.

c. Remove wheel mounting nuts and tire and wheel assembly.

Installation

a. Install tire and wheel assembly to hub with wheel mounting nuts and lower vehicle.

b. Tighten wheel mounting nuts to 35-40 ft.-lbs. (4.8-5.5 kgm) torque, and install hub cap.

2. TIRES (Figure 4)

General

NOTE: In the event of a flat tire, remove wheel per Paragraph 1, this section. Inflate tire to 20 psi (1.33 atm). Immerse tire and wheel in water to determine point of leak. Mark point where bubbles escape. Leak could be due to any of the following: Punctured casing, faulty valve core, valve stem improperly seated in rim or tire bead improperly seated on rim.

When reason for loss of air has been determined, removal of tire from wheel may be necessary.

Removal

IMPORTANT: Tire must be removed or installed from valve stem side of rim.

a. Remove tire and wheel assembly, Paragraph 1, this section

b. Remove valve cap and valve core to free air from tire.

c. If tire machine is unavailable, loosen both tire beads by applying pressure to tire walls, Step I, Figure 4.

d. Push tire bead off rim flange into rim well.

e. Apply tire mounting lubricant to tire beads.

f. With valve stem side up, carefully start upper bead over edge of wheel rim with tire tool, Step II, Figure 4.

CAUTION

Do not use excessive force when starting bead over edge of rim or tire bead may be damaged.

g. When top bead is free of rim, shift lower bead into rim well on one side of wheel and insert tire tool on opposite side. ~~Pry lower~~ bead over rim flange, Step III, Figure 4.

h. When lower bead is started over rim flange, tire can be removed by hand.

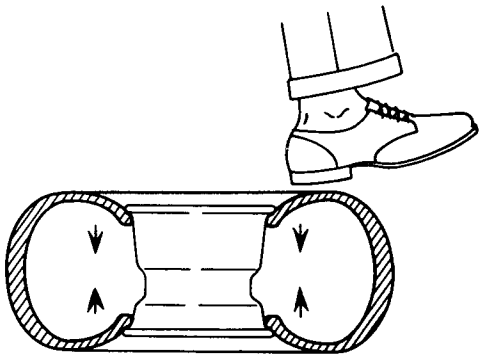

STEP I. BREAK TIRE BEADS FREE OF RIM

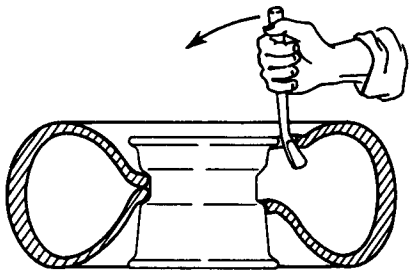

STEP II. REMOVING UPPER BEAD FROM RIM

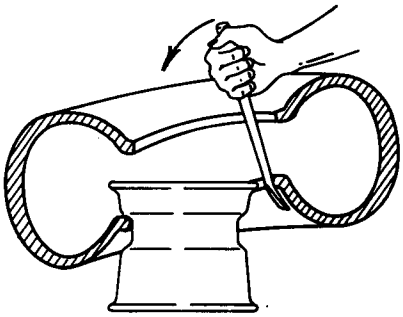

STEP III. REMOVING LOWER TIRE BEAD FROM RIM

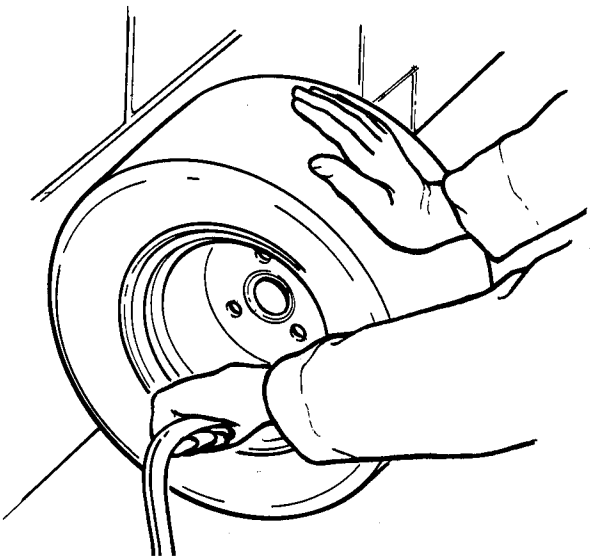

Figure 4 - Tire Removal and Installation

Installation

WARNING

Keep hands, fingers, etc., from exposed areas between bead and rim while inflating or mounting tire.

a. Clean both tire beads to remove dirt or foreign matter.

b. Clean wheel rim where tire beads seat with a wire brush.

IMPORTANT: Cleaning tire and rim is very important as tubeless tires require a perfect seat to seal.

c. Apply a liberal amount of tire mounting solution to both tire bead and rim flange.

d. Install tire on rim from valve stem side. If tire machine is unavailable, use rubber mallet and tire iron to install tire on rim.

e. Remove valve core and position tire so tire bead is seated on rim flange narrow bead seat.

f. Place tire upright against wall and push against tire on side opposite wall, Figure 4. This three point contact will tend to bring bead out in contact with rim so that internal pressure is formed and beads snap into place when air is applied through valve stem.

WARNING

Caution must be used when reinflating or bringing a tire up to recommended pressure from a high pressure air supply. Due to the low pressure requirements of a small tire, overinflation may be reached in a matter of two or three seconds. Overinflation could cause the tire to explode, resulting in possible personal injury.

g. Apply high pressure air through valve stem. 30 to 35 psi should be used to seat tire on rim.

h. Quickly remove air pressure and install valve core.

i. Correct air pressure in tire to 18 psi (1.2 atm), and immerse in water to check for leaks.

j. Install tire and wheel assembly, Paragraph 1, this section.

3. FRONT HUB (Figure 5)

Removal

a. Remove tire and wheel assembly, Paragraph 1, this section.

b. Remove grease cap (1), cotter pin (2) and axle nut (3). Remove hub assembly (4) from axle (5).

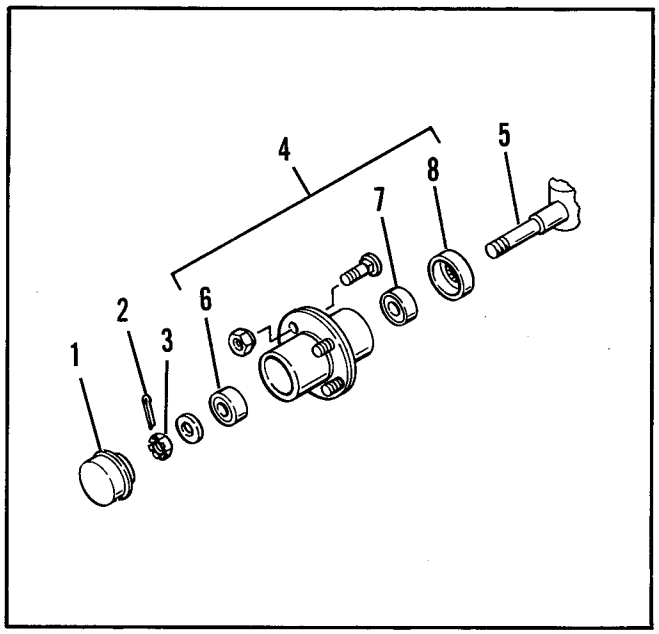

Figure 5 – Front Hub Assembly

Disassembly

a. Pry out oil seal (8) and remove bearings (6 & 7) from each side of hub.

b. Clean all parts and examine for damage and wear. Replace any damaged or worn parts.

Assembly

a. Replace sealed wheel bearings (6 & 7). Grease shaft and housing.

b. If seal (8) has been damaged, replace with new seal.

Installation

a. Install hub assembly (4) on axle (5).

b. Reinstall nut (3), cotter pin (2) and replace grease cup (1).

c. Install tire and wheel assembly, Paragraph 1, this section.

SECTION 3
STEERING AND SUSPENSION

SPECIFICATIONS

Steering Gear Rack and Pinion
(Automotive type totally enclosed lifetime lubrication)
Camber – Mechanical Micrometer Adjustment .... 0°
(wheels at right angle (90°) to ground)
Toe in Adjustment ..... 1/4 in. (6.4 mm) toe-in
Tie Rod Castle Nuts ..... torque to 25-28 ft.-lbs. (3.5-3.9 kgm)
Steering Gear Unit
Frame Mounting Bolts ..... torque to 31-33 ft.-lbs. (4.3-4.6 kgm)
Clamp Bolts ..... torque to 10-15 ft.-lbs. (1.4-2 kgm)
Leaf Spring to
King Pin Bolts ..... torque to 35-40 ft.-lbs. (4.8-5 kgm)

Steering

4. STEERING WHEEL

NOTE: The steering is controlled by a steering wheel through a steering shaft and joints attached to a rack and pinion steering box. The steering is further controlled by two tie rod assembly ends which have a nylon bushing insert. No lubricant is necessary for tie rod ends. The tie rods also provide a means for adjusting front wheel toe.

Removal

a. Remove two screws holding score card holder to steering wheel.

b. Mark steering wheel and steering shaft so steering wheel can be replaced in the exact position as originally installed. See Figure 6.

c. Remove steering wheel nut and apply penetrating oil to shaft splines.

d. Pull steering wheel loose from shaft using suitable puller.

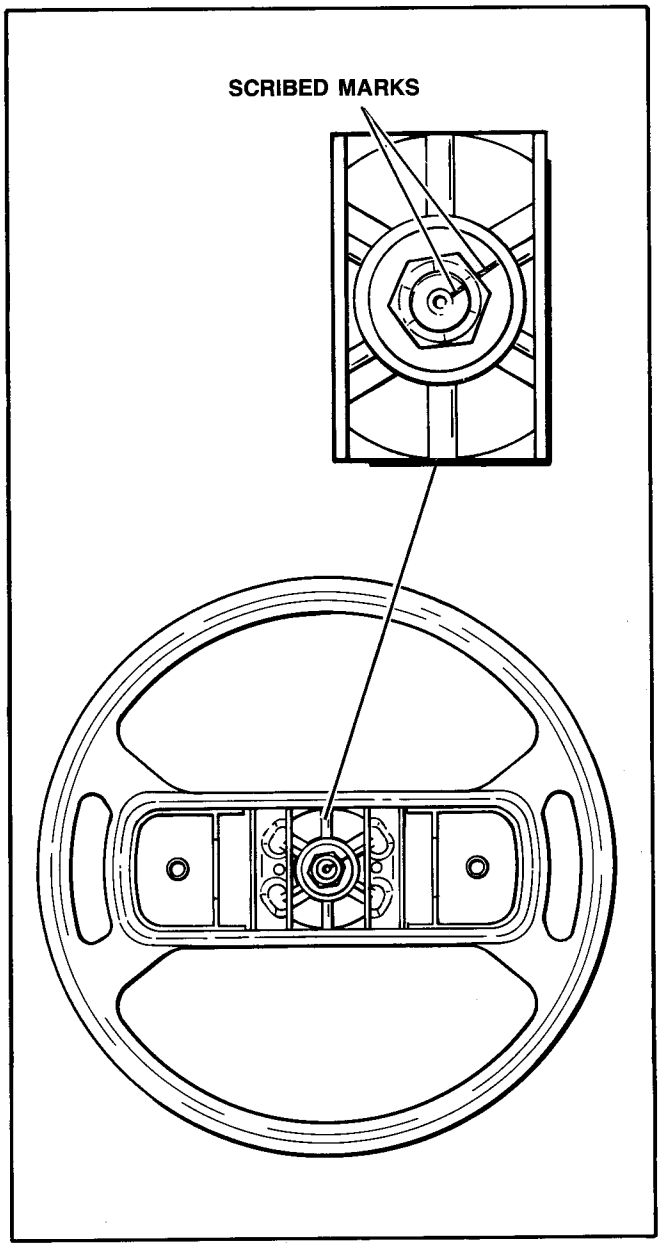

Figure 6 – Steering Wheel Removal

Front Suspension

IMPORTANT: Disassembly of the rack and pinion may require the destruction of the oil seal, part number 57183-88. If you destroy the oil seal when you unnecessarily disassemble the rack and pinion, then the oil seal may not be covered by warranty. The only time that you have to disassemble the rack and pinion is when, through abuse, the pinion gear teeth shear off. A way to tell whether the pinion has sheared teeth is to turn the steering wheel. If the wheels turn normally, then the pinion does not have sheared teeth and disassembly of the rack and pinion is unnecessary.

If your vehicle experiences difficulty with the ball joints on the rack and pinion or the rod ends connected to the steering arms, you must then examine front suspension before making any alignment. The bushings may be worn inside the tube of the A-arms. Then you must replace worn or broken parts and make the proper adjustment.

5. ADJUSTMENT (Figure 7)
Toe In – Toe Out/Camber

Adjustment is made on level surface with correct tire pressure of 18 psi, wheels set straight. Place a 27-1/2 in. long rod or bar between the tires. Loosen jamnuts and turn tie rods equally on each side to make proper adjustment. Make sure the welded stops located on the steering arms, after adjustment, are in contact with the king pin shackle when the steering is extended fully to the right and the left.

Camber adjustment is made with a bolt that goes through the A-arm. Place car on hard level surface. Set steering wheel at the midpoint or center. Place a carpenter square, Figure 8, against front wheel. Hold bolt and loosen nut and then turn camber adjuster, Figure 9, front and rear equally and tilt wheel in to achieve 0 degrees camber.

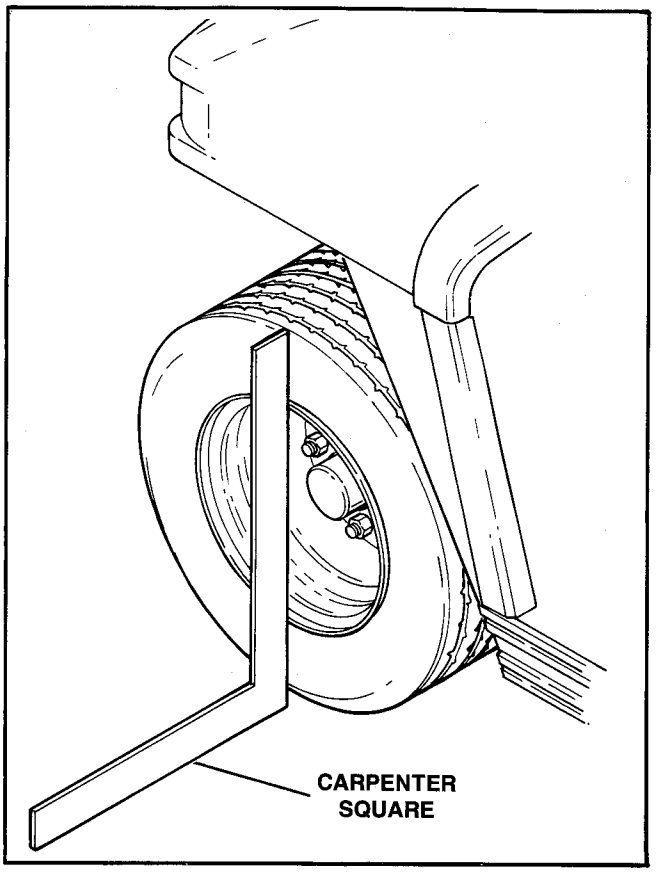

Figure 8 – Camber Adjustment

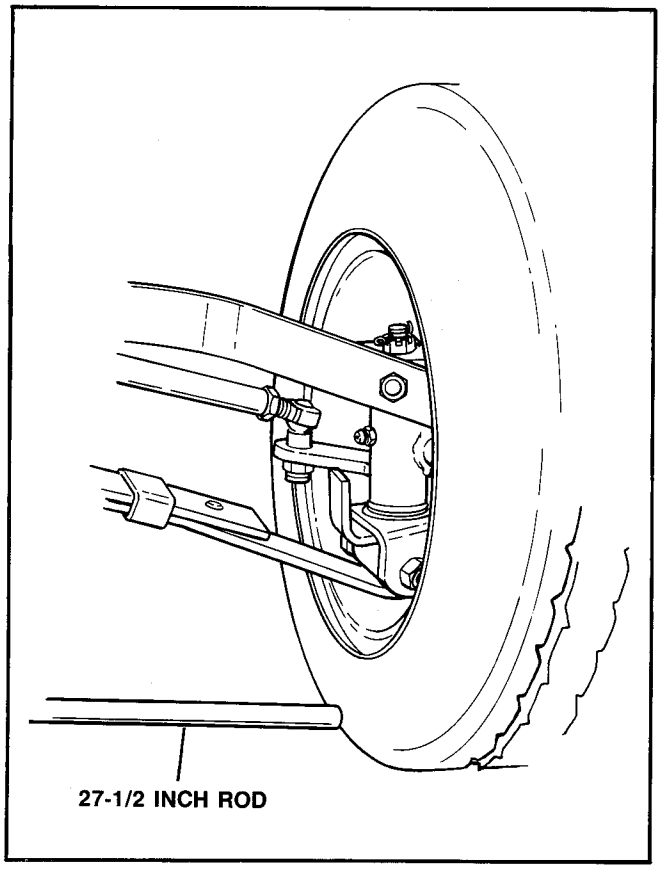

Figure 7 – Toe In – Toe Out Adjustment

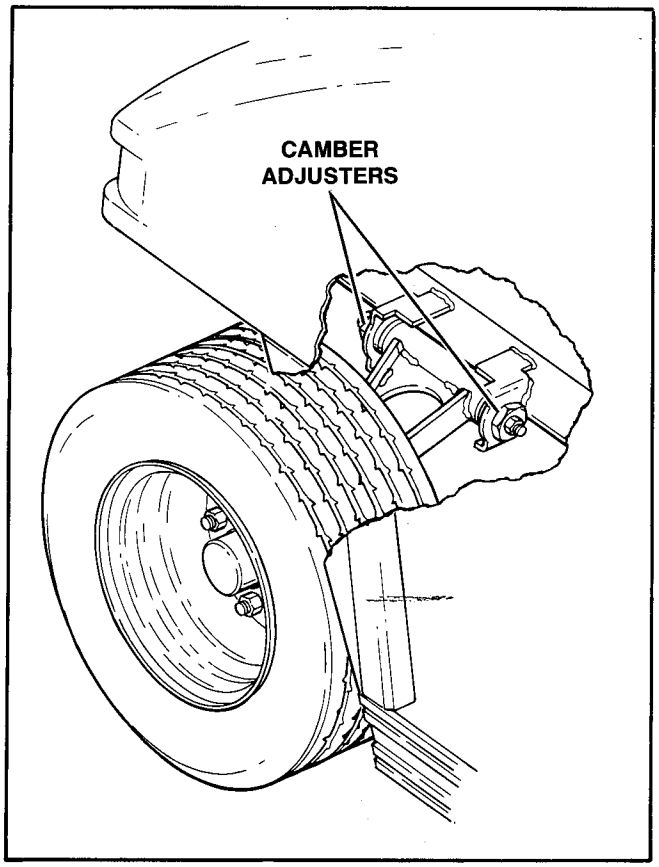

Figure 9 – Camber Adjuster

6. RACK AND PINION REMOVAL

It's easier to remove the rack and pinion from the vehicle if the front body, part number 50300-86, and other parts are first removed. However, it is possible for a person who is very familiar with the procedure to remove the rack and pinion primarily by feel, without removing the front body.

To remove the front housing, see Paragraph 22, SECTION 6. The other parts that need to be removed before the rack and pinion is removable include: Unplugging the key switch, the cable tie on the console, disconnecting the choke cable at the carburetor, and disconnecting the tie rod ends from both sides of the rack and pinion.

Next, remove one bolt, the one closest to the rack and pinion, holding the universal joint. Then remove the 3 bolts holding the rack and pinion to the frame, Figure 10. Maneuver the splined end of the universal joint off of the pinion. Lastly, by pushing the rack all the way to the vehicle's right side, lift out the rack and pinion.

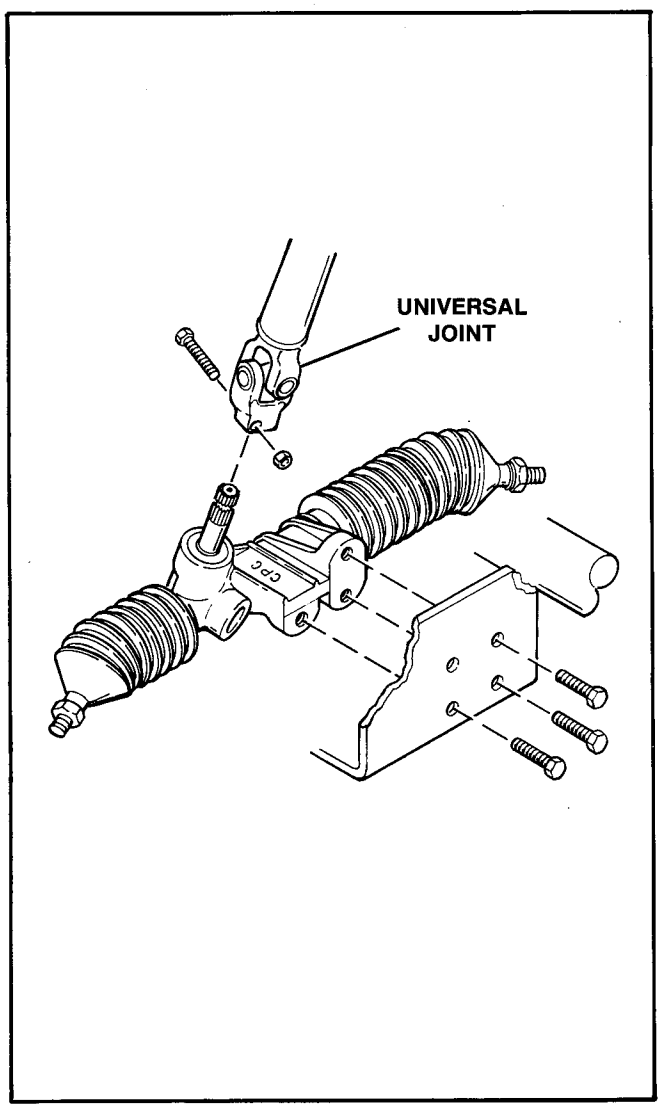

Figure 10 – Rack and Pinion Removal

7. LEAF SPRING REMOVAL (Figure 11)

a. Remove both front wheels and tire assemblies, Paragraph 1, SECTION 1.

b. Remove one nut (3) from one side king pin lower mounting screw (4).

c. Pull screw (4) from king pin.

d. Repeat Steps a, b and c on other side of car.

e. Remove four nuts (19) and bolts (20), retainer plate leaf spring (21).

f. The leaf spring can now be removed.

g. Check condition of sleeve (22) and replace if worn.

h. Install in reverse order.

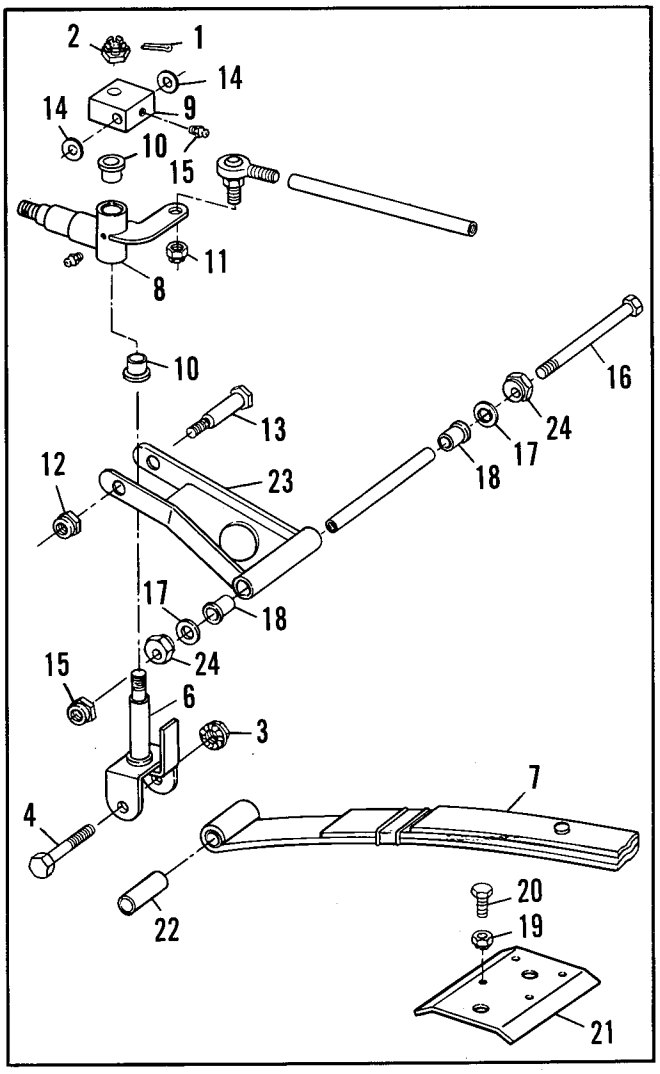

Figure 11 – Leaf Spring, King Pin, Steering Arm and A-Frame Removal

8. TIE ROD REMOVAL (Figure 12)

a. Remove locknut from tie rod assembly.

CAUTION

When disconnecting a tie rod, no attempt should be made to drive a wedge between the tie rod and attached part as this could damage the threads.

b. Pull tie rod end from steering arm and remove rod end.

c. Install in reverse order.

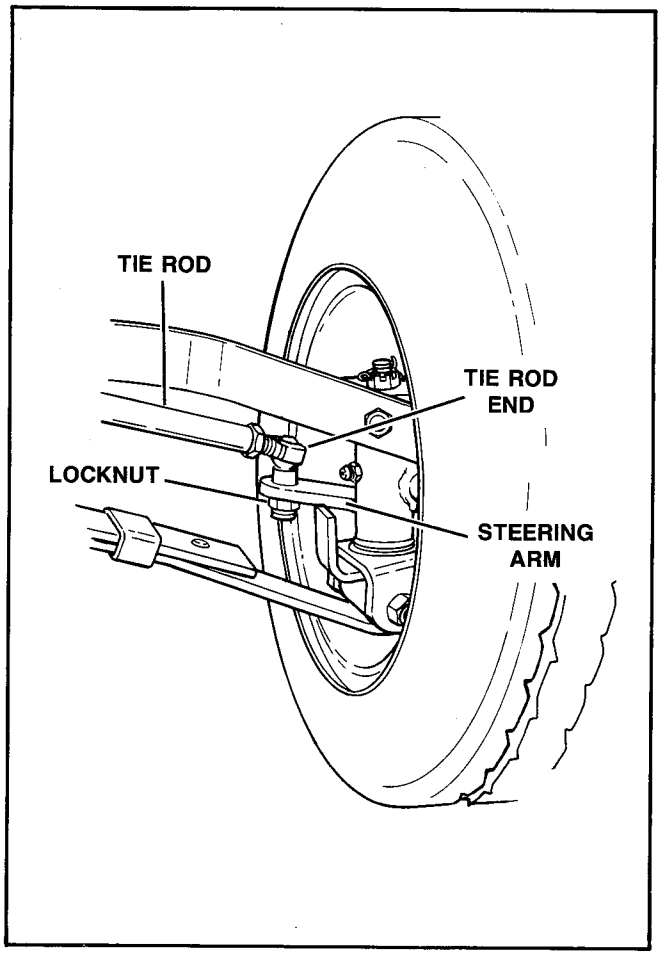

Figure 12 – Tie Rod Removal

9. KING PIN OR STEERING ARM REMOVAL (Figure 11)

a. Remove front hub, Paragraph 3, SECTION 2.

b. Remove cotter pin (1) and nut (2).

c. Remove one nut (3) and bolt (4).

d. Pull out king pin (6) to free it from leaf spring (7) and pull king pin down out of steering arm (8) and pivot block (9). Note position of bronze bushings (10). These bushings must be replaced in the same position as removed.

e. If king pin is worn or damaged, replace king pin and check condition of bushings (10).

f. Remove locknut (11) and pull tie rod(s) as described in Paragraph 8, this section, to remove steering arm.

g. Install in reverse order.

10. A-FRAME REMOVAL (Figure 11)

a. Remove front wheel and tire assembly, Paragraph 1, SECTION 2.

b. Remove nut (12) and bolt (13). Note position of Delrin washers (14).

c. Remove nut (15) and bolt (16). Note position of thrust washers (17) and camber adjusters (24).

d. A-frame (23) can now be removed from car.

e. Check condition of spacers (18) and thrust washers (17) and replace if worn or damaged.

f. Install in reverse order.

Rear Suspension

WARNING

ParCar with angle bag rack – to secure body upright and avoid possible personal injury through accidental closing of body, remove body hold-up rod from clip and insert into slot in body frame.

11. INSPECTING AND REPLACING REAR SHOCK ABSORBER (Figure 13)

a. Lift vehicle per LIFTING INSTRUCTIONS, SECTION 1.

b. Check the shock absorber for fluid leakage at the point where shaft enters body. Leaking shock absorbers should be replaced. Remove as follows:

c. Raise the differential until springs are slightly compressed.

d. Remove the shock upper and lower mounting hardware. Remove the shock absorber.

e. Test the shock absorber by compressing and extending it. Shock should compress slightly easier than it extends. If possible, compare it with a new unit. the shock absorber is not repairable and should be replaced if faulty.

f. To install the shock, extend it to its full length. Place it in the car, shaft side up, and secure with original mounting hardware. Tighten mounting nuts to 50 ft.-lbs. (6.9 kgm) torque.

12. REAR SPRINGS (Figure 13)

NOTE: Coil springs are rated by the force required to compress them one inch. For example, the standard straight wound rear spring, rated at 69 lbs. per inch will compress one inch under a force of 69 lbs. A similar force would be required to compress the spring an additional inch, and so on.

Replacing Rear Springs

a. Remove the shock absorbers per Paragraph 11, this section.

b. Raise the chassis or lower the differential and remove the springs.

c. Install springs on spring supports. Lower the chassis or raise the differential until springs are slightly compressed.

d. Install the shock absorbers per Step f, Paragraph 11.

13. REAR FORK (Figure 14)

NOTE: The rear fork bushings are designed to allow the fork to pivot radially. The bushing also absorbes the vibration of the rear fork. If the bushings are loose, the vibration from the rear fork will be transmitted to the frame causing a low rumbling vibration.

Removal

a. Lift vehicle per LIFTING INSTRUCTIONS, SECTION 1.

b. Remove differential per Paragraph 17, SECTION 4.

c. Remove the nut (4) and pull the bolt (1) free of each mounting boss.

d. Remove the rear fork.

Installation

NOTE: Coat bolt (1) shank the Loctite® ANTI-SIEZE (or equivalent) before installing.

a. Place the rear fork on the frame bosses and fasten using bolt (1), washer (2) and nut (4). Do not tighten nut (4) at this time.

b. Install differential in reverse order of removal, Paragraph 17, SECTION 4.

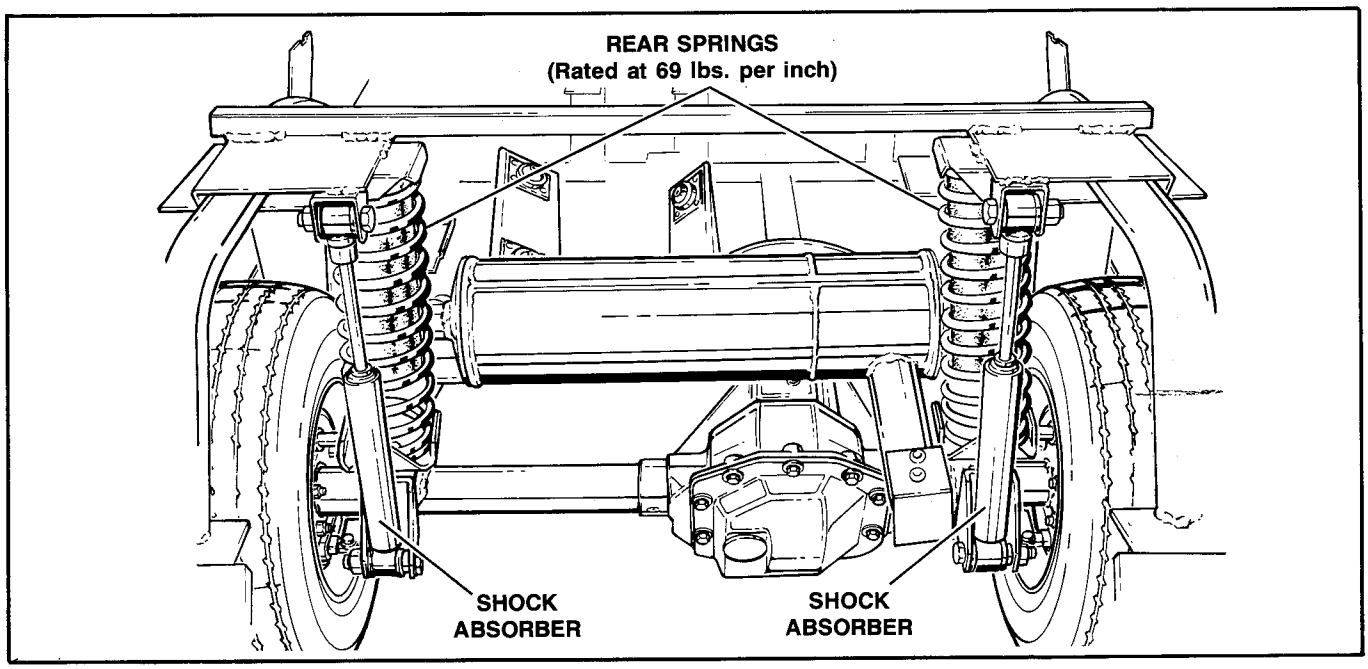

Figure 13 – Rear Springs and Shock Absorbers

c. Lower vehicle. Compress rear of vehicle to obtain a dimension of 3 inches between top of rear fork rubber bumper and main frame tube. While holding this 3 inch dimension, tighten swing arm bushing mounting bolts (4) to 50-60 ft.-lbs. (6.9-8.3 kgm) torque.

14. REPLACING REAR FORK BUSHING(S) (Figure 14)

a. Lift vehicle per LIFTING INSTRUCTIONS, SECTION 1.

b. Remove nut and pull bolt free of each mounting boss. Save washers for reinstallation. Lower the rear fork and let it rest on the ground.

c. Press the bushing towards inside of vehicle to remove it from the frame boss.

d. Pressing from the inside of the vehicle, install a new bushing.

NOTE: Coat bolt shank with Loctite® ANTI-SIEZE (or equivalent) before installing.

e. Raise rear fork and connect it to the frame bosses using the bolts, washers, nut removed in Step b. Do not tighten nut at this time.

f. Lower vehicle. Compress rear of vehicle to obtain a dimension of 3 inches between top of rear fork rubber bumper and main frame tube. While holding this 3 inch dimension, tighten mounting bolt to 50-60 ft.-lbs. (6.9-8.3 kgm) torque.

FRAME

SERVICING

If incorrect frame alignment is suspected, contact Columbia ParCar Technical Services Department for frame specifications.

WARNING

For maximum safety and reliability, replace frames that are severely bent or damaged. Factory repair is not available and field welding or repair is not recommended.

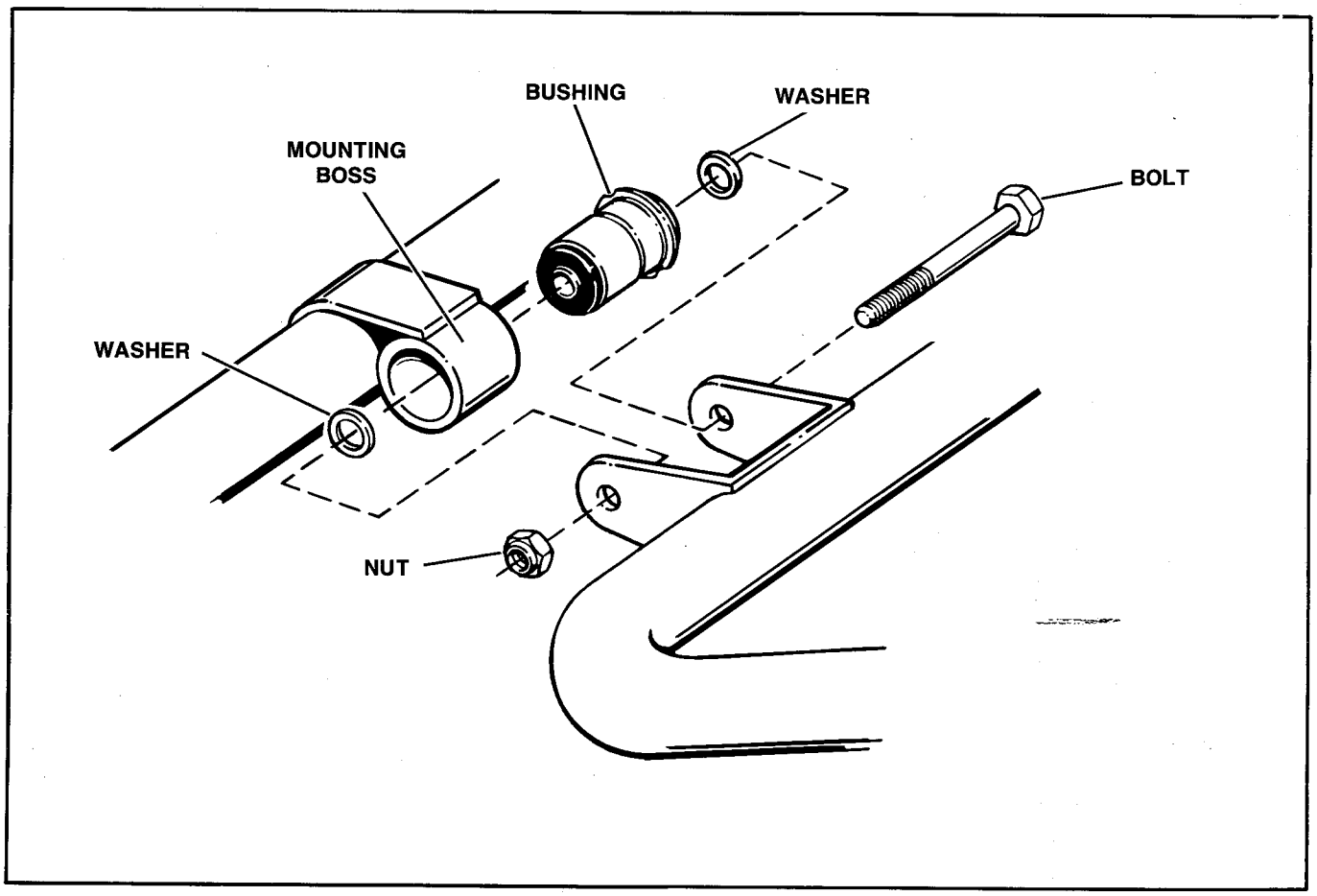

Figure 14 – Rear Fork Bushing

SECTION 4
REAR AXLES AND DIFFERENTIAL

SPECIFICATIONS

Lubricant Type ..... API Service GL5 Multi-purpose Gear Lubricant APG90
Level ..... 1/2 in. (13 mm) below filler plug hole
Capacity ..... 24 oz. (710 ml)
Ring Gear Runout ..... .006 in. (.15 mm) maximum
Ring and Pinion Backlash ..... .004 in.-.008 in. (.1 mm-.2 mm)
Pinion Bearing Pre-load ..... 2-13 in.-lbs. (ring gear not in case)
Wheel Nuts ..... torque to 35-40 ft.-lbs. (4.8-5.5 kgm)
Rear Axle Shaft Nut ..... torque to 70 ft.-lbs. (9.6 kgm) Plus next cotter pin slot
Differential to Rear Fork Mounting Bolts ..... torque to 30 ft.-lbs. (4.1 kgm)
Ring Gear Mounting Bolts .... torque to 35-40 ft.-lbs. (4.8-5.5 kgm)
Pinion Nut ..... torque to 50-75 ft.-lbs. (6.9-10 kgm)
Bearing Cap Bolts ..... torque to 35-45 ft.-lbs. (4.8-6.2 kgm)
Differential Cover Bolts ..... torque to 18 ft.-lbs. (2.4 kgm)

NOTE: The differential lubricant level should be checked yearly and lubricant added as required to 1/2 in. (13 mm) below filler plug hole, Figure 15. API Service GL5 Multi-purpose Gear Lubricant APG90 is recommended. It is not recommended to mix different brands of hypoid lubricants. If replacing lubricant with a different brand, remove differential cover, drain lubricant and flush with light engine oil. Never use kerosene for flushing.

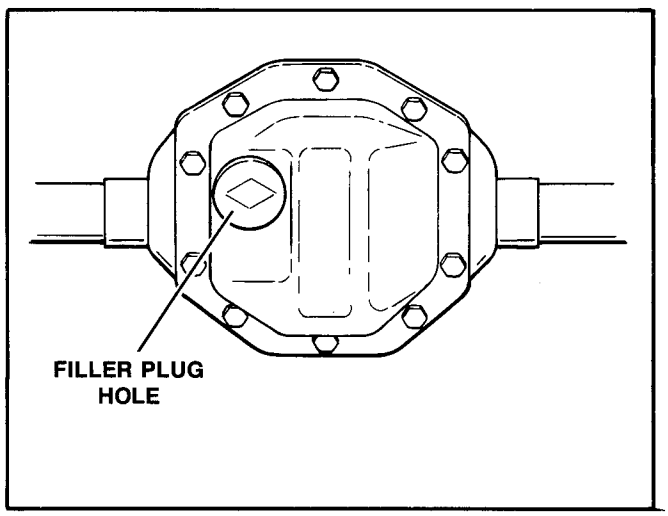

Figure 15 - Differential

Rear wheel bearings receive their lubrication from grease packed in bearings when assembled. Bearings are sealed and do not require repacking.

IMPORTANT: Differential and rear axle noise can be confused with other noises in the car. Considerable care should be taken in diagnosis of noises before deciding that the trouble is in the rear axle assembly. If the differential and rear axle are properly maintained, little difficulty will be experienced.

15. REAR AXLE - ParCar

Removing Rear Axle Shaft, Bearing or Seal (Figure 16)

If an axle shaft must be removed for replacement, or for rear wheel bearing service, it can be removed without removing entire differential and axle assembly.

a. Set parking brake, remove hub cap and slightly loosen wheel rim mounting nuts.

b. Remove cotter pin (1) and loosen axle shaft nut (2).

c. Remove tire and wheel assembly per Paragraph 1, SECTION 2.

d. Remove nut (2) and washer (3).

e. Remove wheel hub (4) from axle shaft. It may be necessary to use slide hammer to remove the wheel hub.

f. Remove snap ring (5) from axle housing.

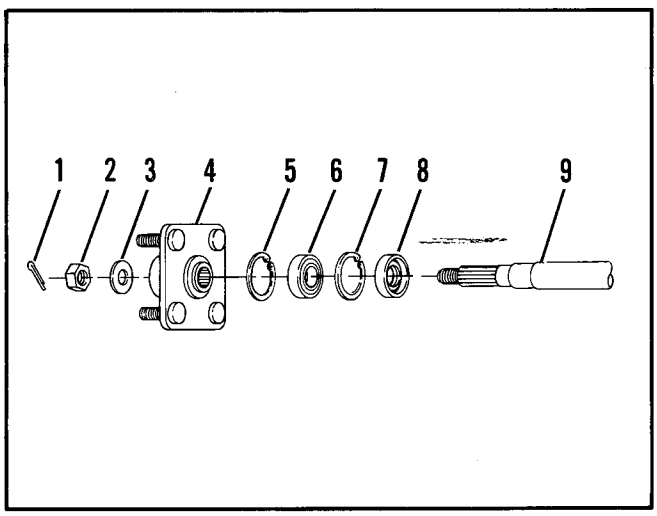

Figure 16 - Rear Axle - ParCar

g. Axle shaft (9), with axle bearing (6) attached, can be removed from the housing with an axle puller.

h. Axle bearing (6) can be pressed from axle shaft (9) by supporting bearing inner race on press bed and applying pressure to the axle nut on end of shaft.

CAUTION

Axle nut must be mounted flush with axle end during pressing to avoid damage to axle.

i. To remove seal (8), first remove snap ring (7) then pull or pry seal (8) from housing.

j. Install in reverse order.

16. REAR AXLE – Utilitruck

Removing Rear Axle Shaft, Bearing or Seal (Figure 17)

If an axle shaft must be removed for replacement, or for rear wheel bearing service, it can be removed without removing entire differential and axle assembly.

a. Set parking brake, remove hub cap and slightly loosen wheel rim mounting nuts.

b. Remove cotter pin and loosen axle shaft nut.

c. Remove tire and wheel assembly per Paragraph 1, SECTION 2.

d. Remove nut and washer.

e. Remove wheel hub from axle shaft. It may be necessary to use slide hammer to remove the wheel hub.

f. Inspect all gaskets and bearings for wear or damage.

g. Install in reverse order.

17. DIFFERENTIAL

Removing Rear Axle and Differential Assembly (Figure 18)

When repairs to the housing or differential are necessary, the entire rear axle and differential assembly must be removed.

a. Remove rear tire and wheel assembly per Paragraph 1, SECTION 2.

b. Remove transmission secondary drive. Paragraph 36, SECTION 9.

c. Support differential assembly and remove lower shock mounting bolt (1) and nut (2), Figure 18.

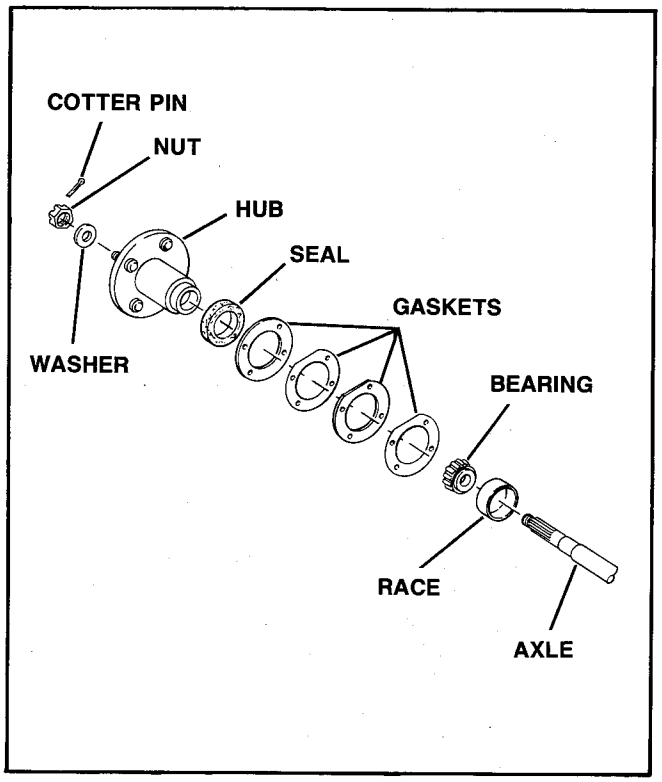

Figure 17 – Rear Axle – Utilitruck

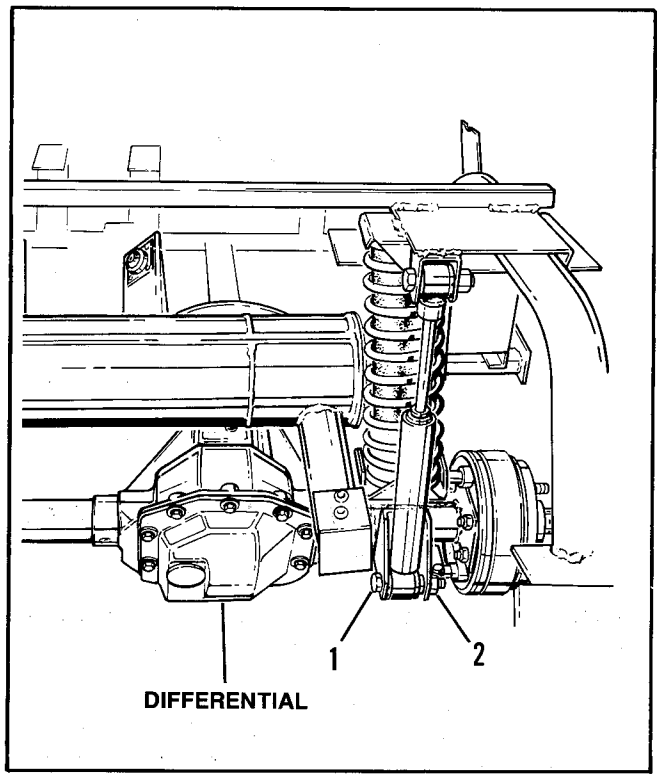

Figure 18 – Differential Removal

d. Remove four locknuts (3) and four bolts (4), Figure 19. When reinstalling four locknuts (3), torque to 30 ft.-lbs. (4.1 kgm).

e. Remove differential assembly.

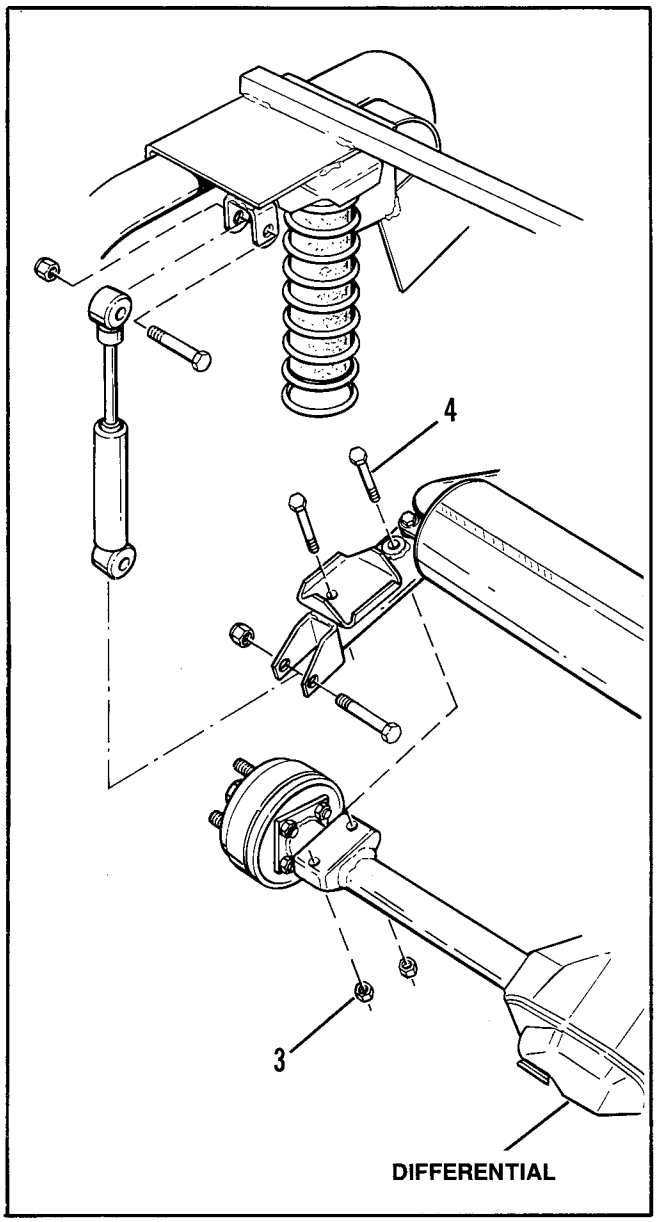

Figure 19 - Remove Differential Assembly

Disassembling and Inspecting Differential

NOTE: All parts that are to be reused should be installed in the position from which they were removed.

When taking apart complex assemblies with numerous similar pieces requiring the matching of interfacing assemblies or multiple shims, it is suggested to mark individual pieces with grease pencil or tag all components to ease reassembly.

a. Clean housing and place in a holding fixture or large vise. Grip tubes with carrier cover facing up.

b. Remove both axles as described in Paragraph 15, this section.

NOTE: Differentials use a bead of G.E. 732 SILMATE® SILICON SEALER on the differential housing.

c. Remove cover bolts and cover and clean gasket sealant from housing.

d. Drain lubricant and flush carrier with a non-flammable cleaning solvet.

NOTE: After draining, check lubricant for contaminants. Noting the amount and type of contaminants in the fluid can help in diagnosing differential problems.

e. Check "ring gear runout" with dial indicator, Figure 20. Place contact point of dial indicator on back face of ring gear. Rotate ring gear one complete revolution. Maximum runout is .006 in. (.15 mm). Reading in excess of specification indicates loose or warped ring gear, dirt or burr on ring gear mounting surface, or sprung differential case.

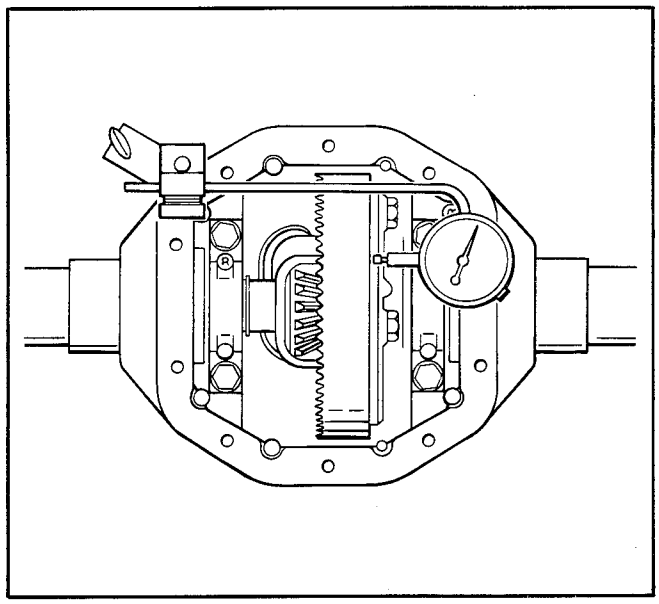

Figure 20 - Ring Gear Runout Check

f. Check backlash with dial indicator, Figure 21. Place contact point of dial indicator on a ring gear tooth. Hold pinion shaft and move ring gear back and forth without moving the pinion gear or shaft. Repeat backlash check at four equally spaced points around ring gear. Backlash must be held between .004 in. (.1 mm) and .008 in. (.2 mm) and must not vary more than .002 in. (.05 mm) between positions checked. Readings in excess of specifications indicate worn ring and/or pinion gear or improper backlash adjustment.

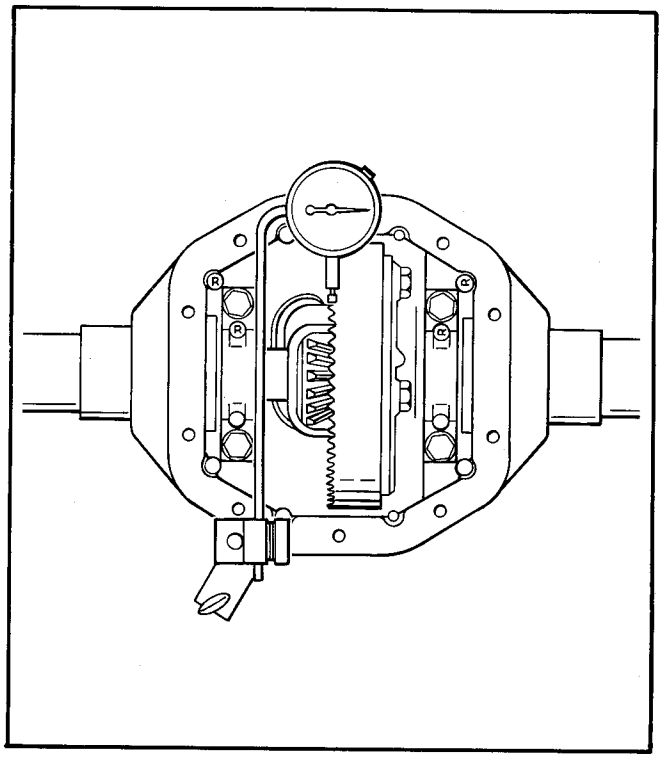

Figure 21 – Ring and Pinion Backlash Check

g. Remove differential bearing cap bolts (4), Figure 22. Bearing caps are marked for location identification along with the carrier. When reassembling, the caps must be installed in their original position. Remove bearing caps (5).

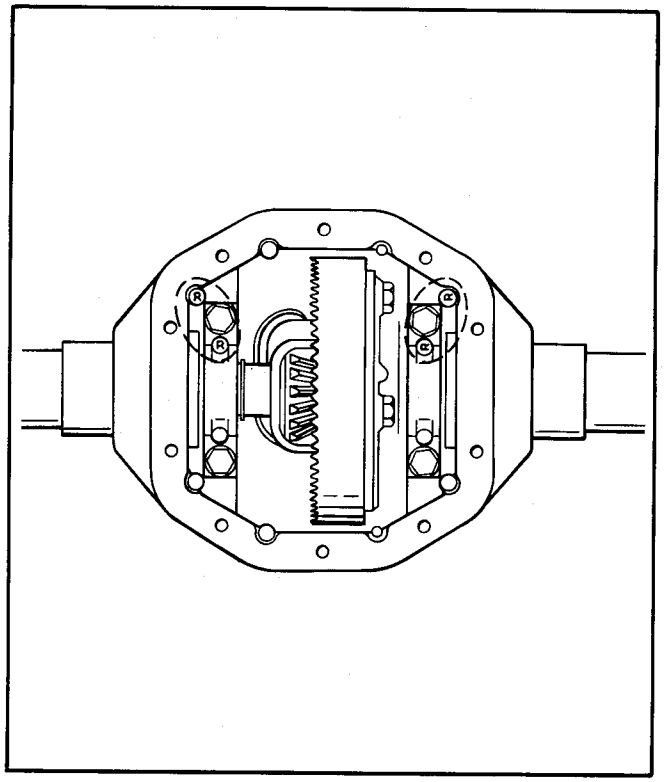

Figure 22 – Bearing Cap Identification

h. Pry differential case assembly from carrier with two pry bars, Figure 23.

CAUTION

Pry out case assembly as straight up as possible, using pressure against housing, to prevent damaging ring and pinion gears. (Use care when prying to avoid damaging gasket surface.)

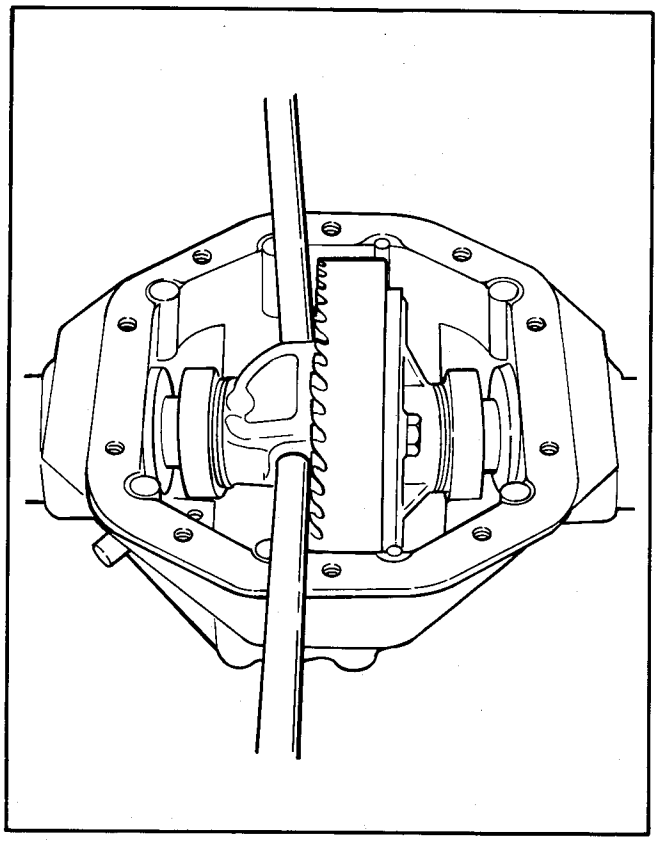

Figure 23 – Prying Out Case

i. Remove bearings (3) if they are worn or damaged, Figure 24. (Do not remove differential bearings unless bearing failure is evident.) If removal is necessary, care must be taken to ensure that bearing puller jaws are located in cast recesses of differential case so the puller jaws will apply their force to the inner bearing race and not the bearing cage, Figure 25.

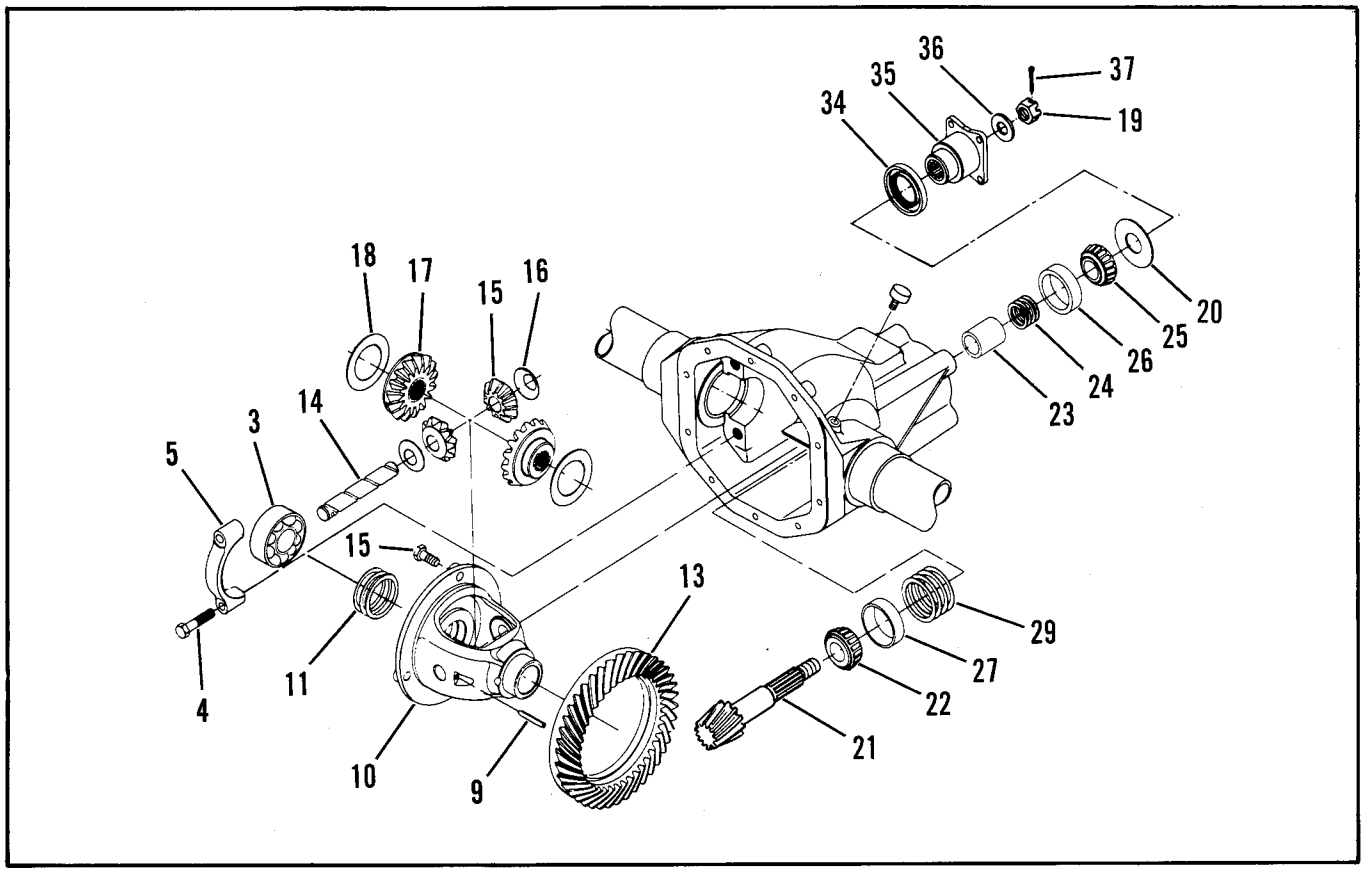

Figure 24 – Differential Assembly

to ensure that bearing puller jaws are located in cast recesses of differential case so the puller jaws will apply their force to the inner bearing race and not the bearing cage, Figure 25.

j. Remove shims (11). Band or wire shims together to avoid losing them.

NOTE: If ring and pinion gears are to be reused, shims (11) must be reinstalled in their original position.

k. Remove bolts (12) from ring gear (13).

l. Use a soft hammer to tap ring gear from differential case, Figure 26. Be careful not to damage ring gear teeth.

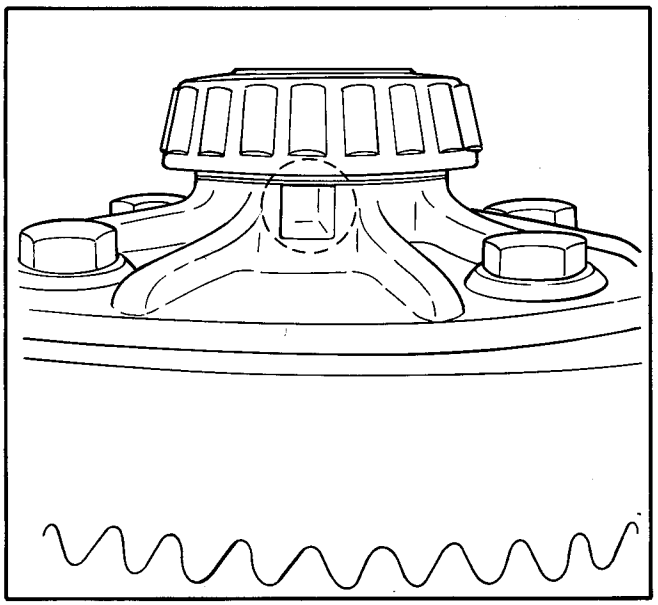

Figure 25 – Recess For Puller

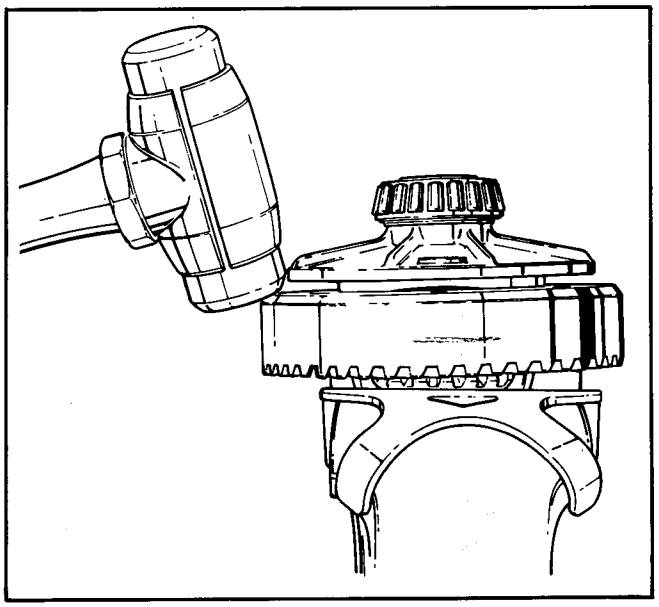

Figure 26 – Removing Ring Gear

m. Drive out lock pin (9) which secures pinion mate shaft (14) to differential case (10), Figure 26A.

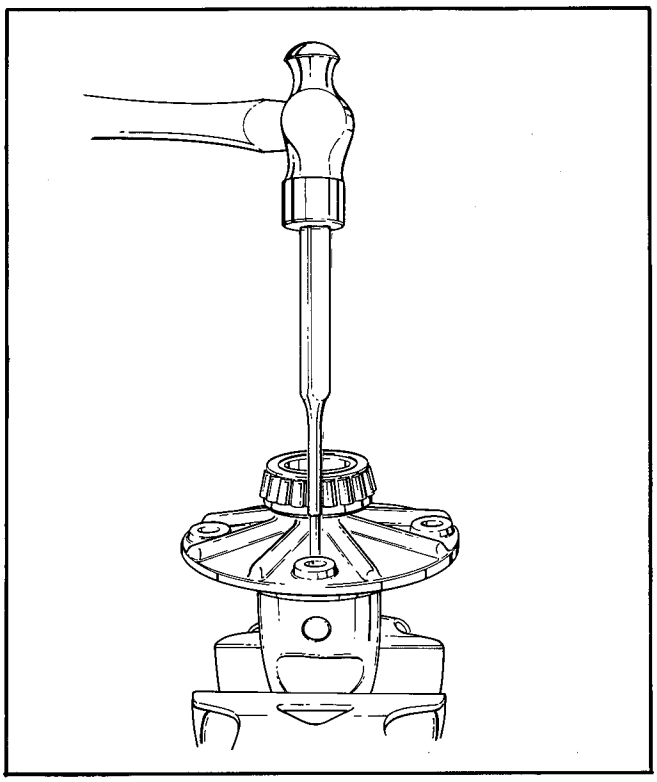

Figure 26A – Driving Out Lock Pin

n. Drive pinion mate shaft (14) from case with long brass drift, Figure 27.

o. Remove pinion mate gears (15) and thrust washers (16) (one on back of each gear) by rotating both gears 90° to opening in differential case.

p. Remove differential side gears (17) and thrust washers (18) (one on back of each gear) through opening in differential case.

NOTE: Pinion mate gears and differential side gears, along with their respective thrust washers, must be replaced in their orignial position upon reassembly.

q. Turn housing in vise or holding fixture so that drive pinion shaft is vertical, extended spine facing up.

r. Remove cotter pin (37), pinion nut (19), washer (36), pinion yoke (35), and oil seal (34).

CAUTION

Procedure other than suggested could cause damage.

s. Remove oil slinger (20), pinion shaft (21), sleeve (23), shims (24) and bearing cones (22 and 25). Retain pinion gear preload shims (24) for reassembly.

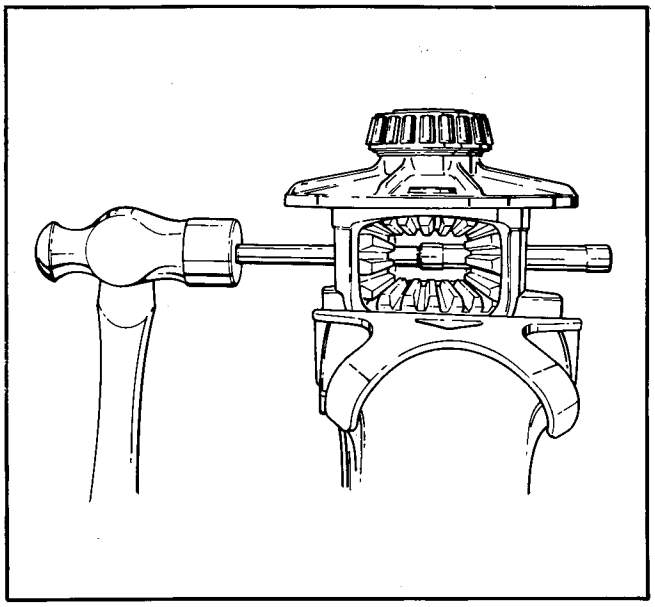

Figure 27 – Remove Pinion Mate Shaft

t. Rear bearing cup (27) can be driven out with drift, Figure 28. Shims (29) are located between bearing cup (27) and carrier bore. Retain these shims for reassembly. Shims (29) are used to set pinion depth.

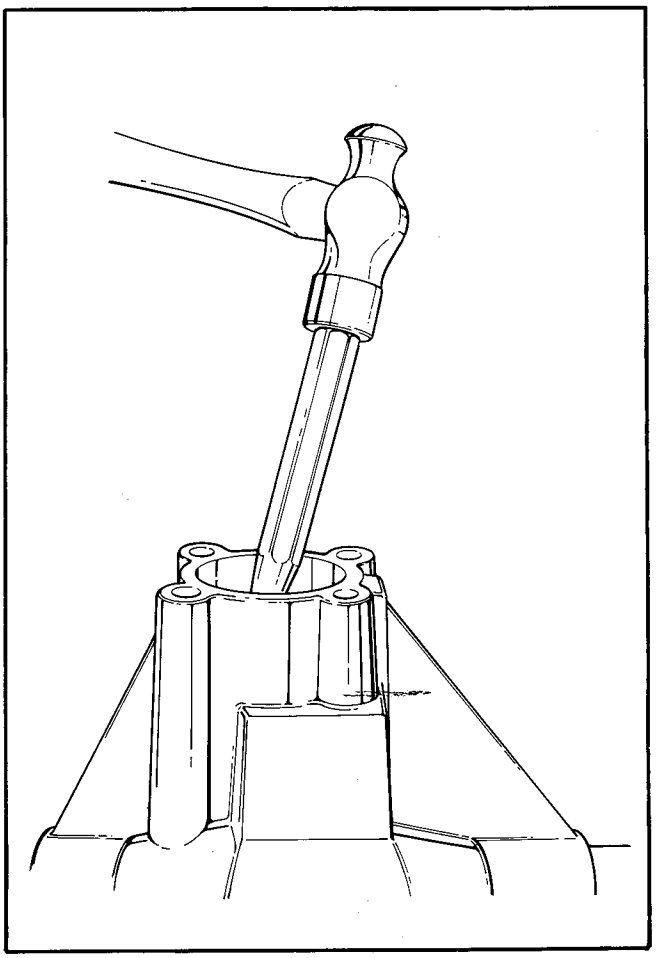

Figure 28 – Removing Rear Pinion Bearing Cup

u. Front bearing cup (26) can be driven out of housing with brass drift. Use caution to avoid nicking carrier bore.

v. Wash all parts including housing with non-flammable cleaning solvent. Do not steam clean because water and condensation are very difficult to remove from differential parts.

w. Examine all bearing surfaces, mating surfaces and splines for burrs or scoring. Remove burrs with hand stone.

x. Check all bearing cups and cones for nicks, roller end wear, grooves and any damage. Do not replace a worn cup or cone individually, renew in sets only if either is worn. Bearings develop wear patterns in both the cup and cone and replacing one without the other will cause the new part to wear prematurely. Any seal, once removed, must be replaced with a new seal.

NOTE: Ring gear (13) and pinion gear (21) are available in matched sets only. Do not replace one without replacing the other. Failure to replace both gears will result in excessive wear, noisy operation and premature breakdown.

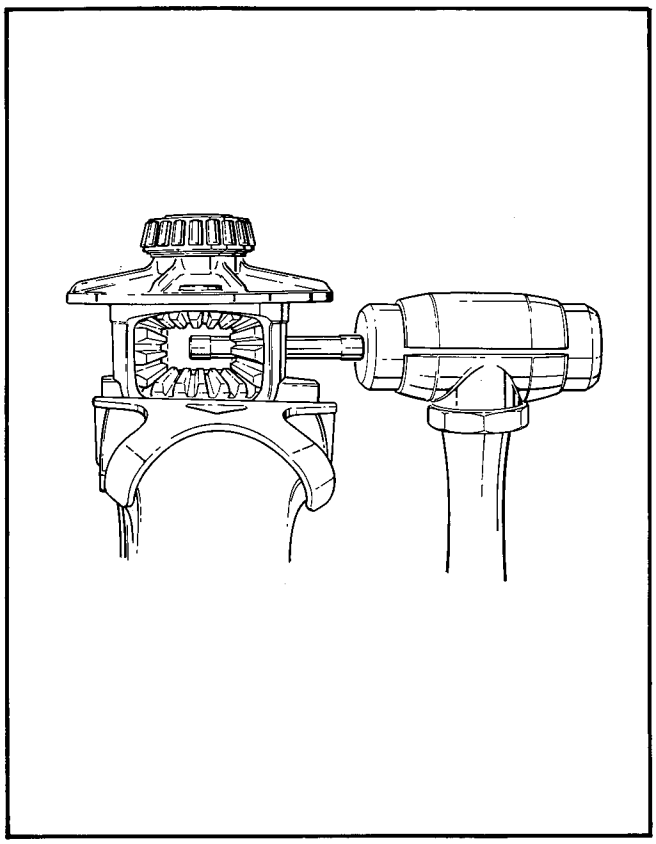

Figure 29 – Installing Pinion Mate Shaft

Assembling Differential (Figure 24)

NOTE: All parts that are to be reused should be installed in the position from which they were removed.

Lubricate all frictional surfaces with API Service GL5 Multipurpose Gear Lubricant APG90 during assembly.

a. Install thrust washers (18) behind their respective side gear (17) and install in differential case.

b. Install thrust washers (16) and pinion mate gears (15).

c. Rotate pinion mate gears (15) until pinion mate shaft (14) can be inserted. Use soft hammer if necessary to drive mate shaft into case, Figure 29.

d. Align lock pin hole in pinion mate shaft (14) with hole in case and drive lock pin (9) to approximate center location of pinion mate shaft, Figure 30.

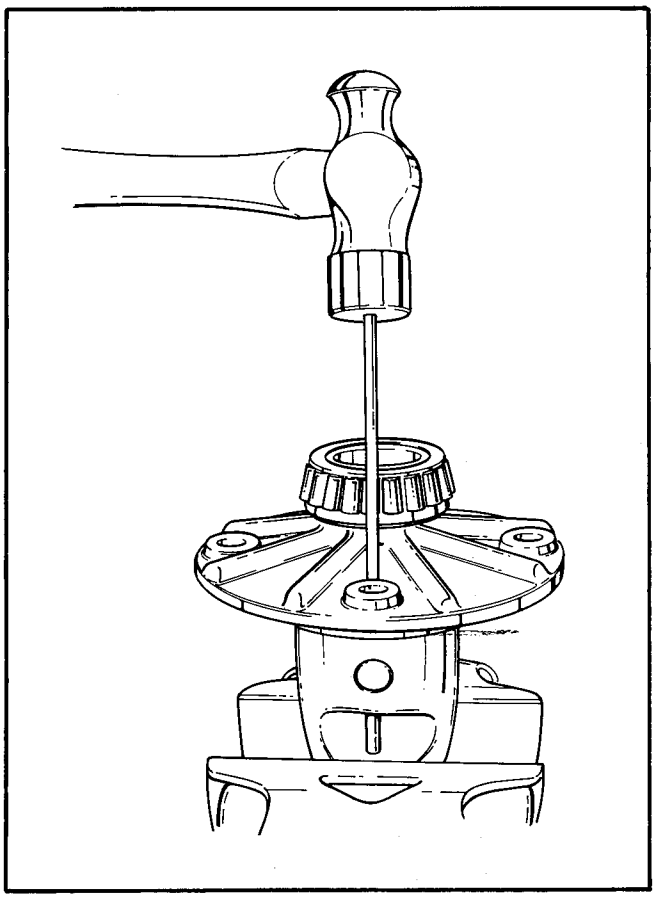

Figure 30 – Installing Lock Pin

e. When pressing on new differential bearings (8 or 3), original shims (11) may be reused in their original location if they were not damaged during disassembly. If new shims are used, be sure they are the same thickness as originals. Press on inner race of bearing only, Figure 31.

CAUTION

Mating surfaces on differential case and ring gear must be perfectly clean and free of nicks and burrs. Contaminated mating surfaces will cause excessive ring gear runout resulting in premature failure and noisy operation.

f. Position ring gear (13) on differential case and start bolts (12) into ring gear. Tighten bolts (12) alternating back and forth across gear to pull ring gear evenly into place. Tighten bolt (12) to 35-45 ft.-lbs. (4.8-6.2 kgm) torque.

g. Drive or press pinion bearing cup (26) into housing.

h. Install original pinion depth shims (29) or new shim pack of same thickness into housing. Drive or press bearing cup (27) into housing against shims (29).

i. Install pinion bearing (22), spacer (23) and original preload shims (24) on pinion shaft (21). If original preload shims (24) are damaged, replace with new shim pack of same thickness.

NOTE: Two numbers of significance will be found on the pinion shaft. The number painted on the shaft itself should match a number painted on thje outside diameter of the ring gear, matching these two numbers will identify a matched ring and pinion set.

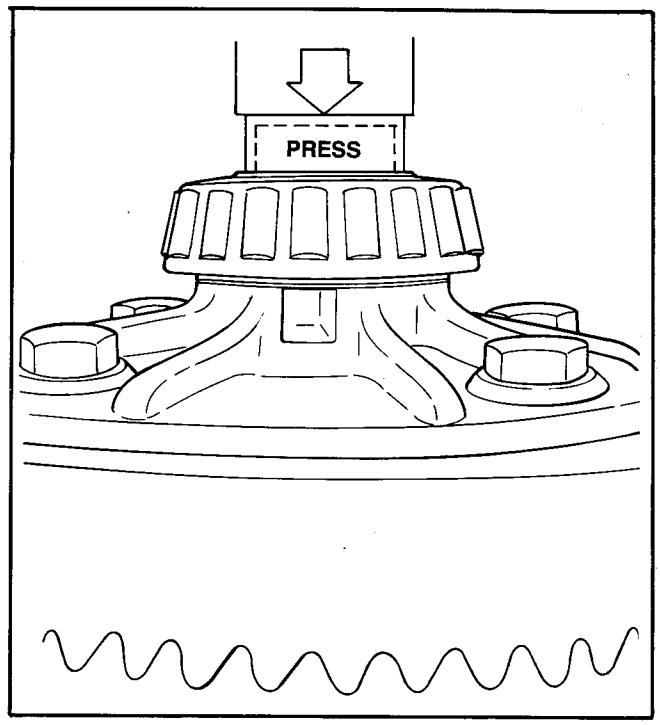

Figure 31 – Pressing on Differential Bearings

The number (preceeded by a plus or minus sign) on the gear end of the pinion shaft relates to the depth which the pinion shaft is set into the housing. If no number appears, the number will be 0. This depth is regulated by the number of shims (29). Shims will be added or subtracted when changing pinion shafts according to the change in numbers between the old and new shaft. For example, if an old shaft had a "–1" stamped on the end and the new shaft had a "+2", ".003" of shims would be subtracted to make the difference. Proper shimming is important to provide for proper meshing of the ring and pinion gears. See Tables 3 and 4.

Old Pinion Marking	New Pinion Marking								
	–4	–3	–2	–1	0	+1	+2	+3	+4
+4	+0.008	+0.007	+0.006	+0.005	+0.004	+0.003	+0.002	+0.001	0
+3	+0.007	+0.006	+0.005	+0.004	+0.003	+0.002	+0.001	0	–0.001
+2	+0.006	+0.005	+0.004	+0.003	+0.002	+0.001	0	–0.001	–0.002
+1	+0.005	+0.004	+0.003	+0.002	+0.001	0	–0.001	+0.002	–0.003
0	+0.004	+0.003	+0.002	+0.001	0	–0.001	–0.002	–0.003	–0.004
–1	+0.003	+0.002	+0.001	0	–0.001	–0.002	–0.003	–0.004	–0.005
–2	+0.002	+0.001	0	–0.001	–0.002	–0.003	–0.004	+0.005	+0.006
–3	+0.001	0	–0.001	–0.002	–0.003	–0.004	–0.005	–0.006	–0.007
–4	0	–0.001	–0.002	–0.003	–0.004	–0.005	–0.006	–0.007	–0.008

Table 3
Pinion Setting – English U.S. Standards

Old Pinion Marking	New Pinion Marking								
	−10	−8	−5	−3	0	+3	+5	+8	+10
+10	+.20	+.18	+.15	+.13	+.10	+.08	+.05	+.03	0
+8	+.18	+.15	+.13	+.10	+.08	+.05	+.03	0	−.03
+5	+.15	+.13	+.10	+.08	+.05	+.03	0	−.03	−.05
+3	+.13	+.10	+.08	+.05	+.03	0	−.03	−.05	−.08
0	+.10	+.08	+.05	+.03	0	−.03	−.05	−.08	−.10
−3	+.08	+.05	+.03	0	−.03	−.05	−.08	−.10	−.13
−5	+.05	+.03	0	−.03	−.05	−.08	−.10	−.13	−.15
−8	+.03	0	−.03	−.05	−.08	−.10	−.13	−.15	−.18
−10	0	−.03	−.05	−.08	−.10	−.13	−.15	−.18	−.20

Table 4
Pinion Setting - Metric

k. Install pinion shaft (21) along with bearing (22), spacer (23), and shims (24) into housing.

l. Install bearing (25), oil slinger (20), oil seal (34), pinion yoke (35), washer (36), and pinion nut (19) on pinion shaft. Tighten pinion nut to 50-75 ft.-lbs. (6.9-10.3 kgm) torque aligning cotter pin hole and nut. Use a 1-1/4 inch offset box wrench to hold the pinion nut and a spline socket to turn pinion shaft.

m. Pinion preload is checked with in.-lbs. torque wrench. Turning torque of pinion shaft should be between 2-13 in.-lbs. Pinion shaft must be vertical for this check. Torque reading to start shaft turning should be disregarded. If torque reading is high, add shims to increase shim pack (24) thickness. If torque reading is low, remove shims to decrease shim pack (24) thickness. Preload shims are available in the following thicknesses: .003 in. (.076 mm), .005 in. (.13 mm), .010 in. (.25 mm), and .030 in. (.76 mm). When turning torque is correct, install cotter pin (37).

n. Install differential case assembly (6) along with bearing cups (7) into housing aligning ring and pinion gears to avoid nicking teeth. Tap ring gear lightly with soft hammer to seal case assembly, in housing, Figure 32.

o. Install bearing caps (5) making sure the letter stamped on them corresponds to the letter on the housing. Install bearing cap bolts (4) and tighten to 35-45 ft.-lbs. (5.5 kgm) torque.

p. Check ring and pinion gear backlash as described in Step f of Disassembly. High backlash is corrected by moving ring gear closer to pinion gear. Low backlash is corrected by moving ring gear away from pinion gear. Backlash adjustment is made by switching shims (11) from one side of differential case to the other.

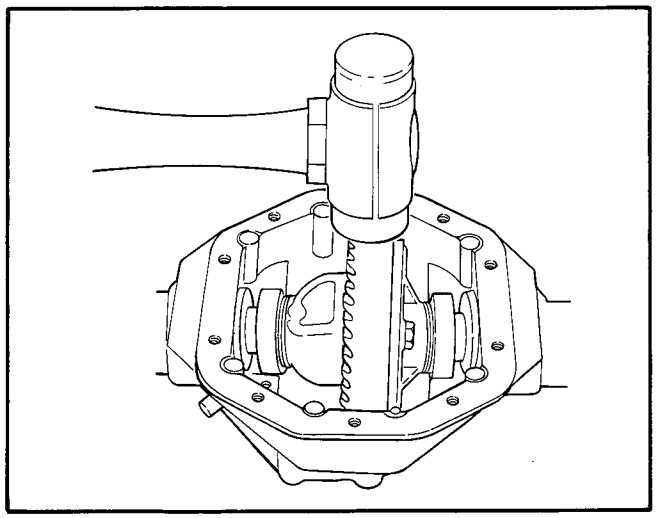

Figure 32 - Installing Differential Assembly

q. Reinstall axles and hubs in reverse order of removal, Paragraph 15 or 16, this section.

NOTE: Use a bead of G.E. 732 SILMATE® SILICON SEALER on the differential housing rather than a gasket. Columbia recommends the use of this sealant for reassembly.

r. Apply a bead of sealant to differential housing, cover and cover holes. Tighten cover bolts (2) to 18-23 ft.-lbs. (3.8 kgm) torque. Allow adequate time for sealant to cure.

s. Refill with API Service GL5 Multipurpose Gear Lubricant APG90.

t. Reinstall rear axle and differential assembly in reverse order of removal, Paragraph 17, this section.

SECTION 5
BRAKES

18. BRAKE

Two cables operate drum type rear wheel brakes with mechanical wear adjusters.

The braking function and brake pedal free travel should be checked monthly or as necessary to determine the need for adjustment.

The brake cables and brake shoes will need to be adjusted if the brake pedal free travel becomes excessive as indicated by parking brake locking in upper notch of ratchet.

Brake Cable Removal (Figure 33)

a. Raise the vehicle body.

WARNING

ParCar with angle bag rack – to secure body upright and avoid possible personal injury through accidental closing of body, remove body hold-p rod from clip and insert into slot in body frame.

b. Disconnect cotter pin and clevis pin from actuator brake assembly.

c. Take the cable routed over the frame cross member and remove.

d. Disconnect second brake cable from brake and remove.

e. Inspect cables and replace if needed.

f. Install in reverse order.

g. Adjust brake.

Brake Adjustment

a. Raise rear wheels off ground per LIFTING INSTRUCTIONS, SECTION 1.

b. Remove rubber protective caps, Figure 33, from brake adjusters on brake backing plates.

c. While rotating rear wheel turn adjusting screw in until brake locks. Back off adjusting screw until wheel rotates freely (approximately 5 clicks). Replace cap. Adjust opposite brake in same manner.

d. Carefully lower vehicle.

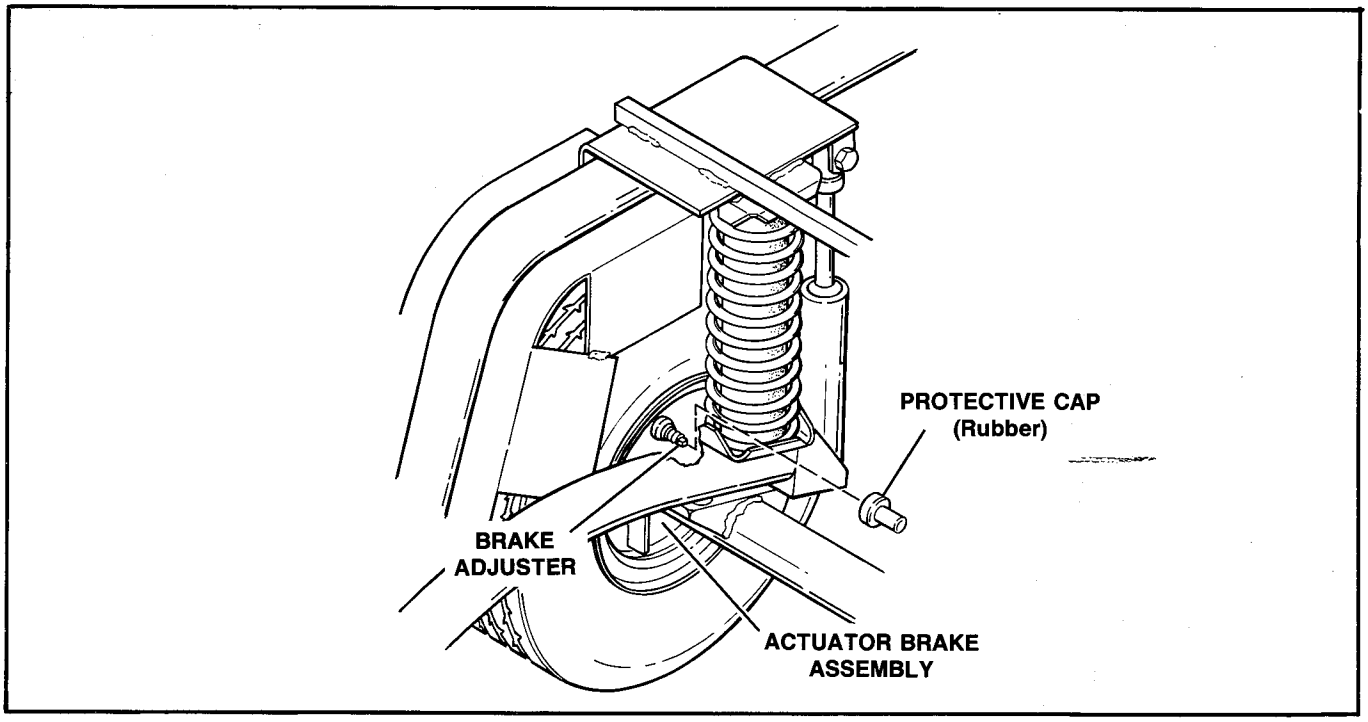

Figure 33 – Brake Cable Removal and Adjustment

19. PARKING BRAKE (Figure 34)

After stopping the vehicle, the parking brake may be engaged by depressing the PARK pedal.

Depressing the accelerator pedal will release the parking brake.

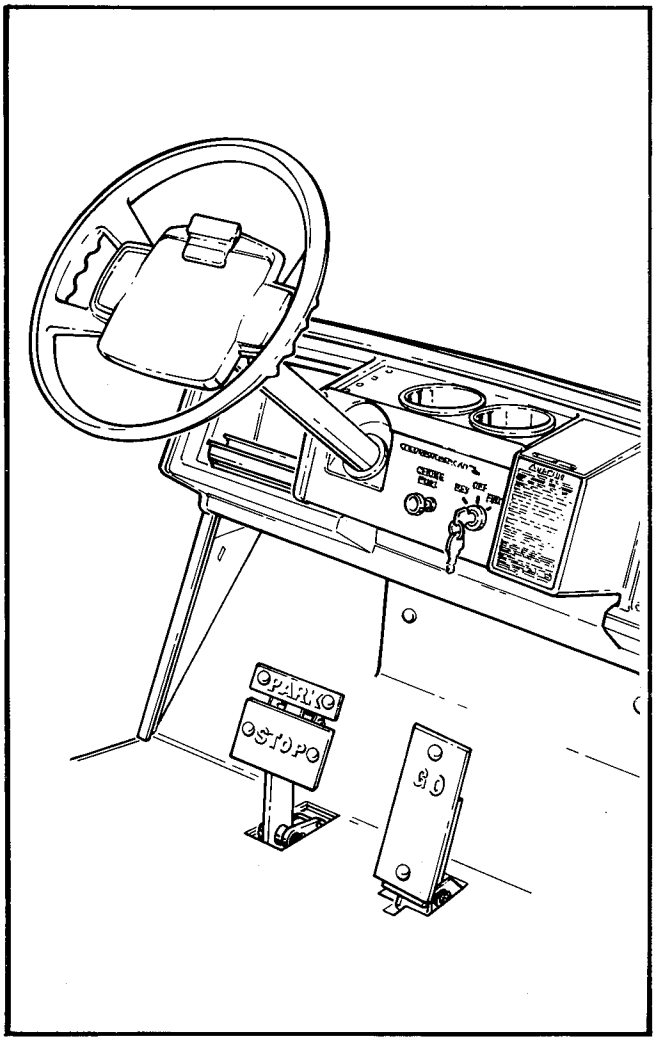

Figure 34 – Parking Brake

Parking Brake Adjustment (Figure 35)

Additional travel by compressing a pre-loaded spring allows engagement of parking brake ratchet teeth. This allows the parking brake to compensate for brake shoe wear between service intervals. To correct adjustment of the pre-loaded spring, proceed as follows:

a. Raise rear wheels off ground per LIFTING INSTRUCTIONS, SECTION 1.

b. Remove the pin that holds the brake cable equalizer to the in-line spring housing.

c. With a vise grip pliers, hold the threaded rod between the in-line spring housing and brake pedal. Tighten locknut to compress the spring until it is solid. After you tighten the locknut, back it off 3 full turns.

d. Connect the in-line spring housing to the brake cable equalizer by inserting the pin, **from the top down** and securing it with the washer and cotter pin removed in Step b.

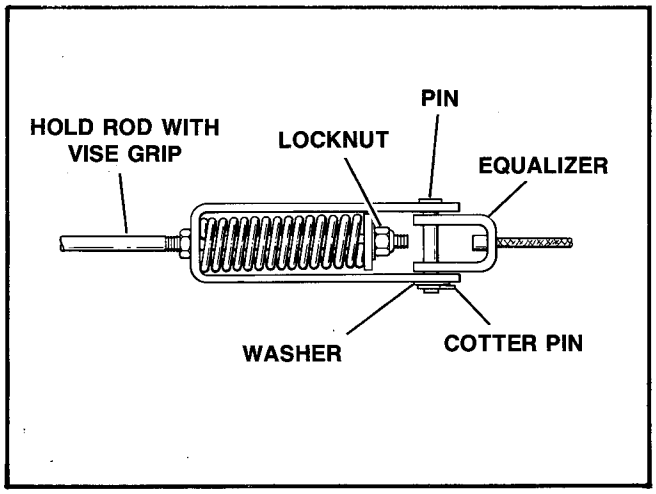

Figure 35 – Pre-Loaded Spring Adjustment

SECTION 6
BODY

20. WINDSHIELD

Maintenance

The optional windshield is made of a clear durable plastic. Use a mild soap or detergent with water for normal cleaning. Flush with clear water first to soften dirt. Then wipe clean with sponge or soft cloth using plenty of water.

CAUTION

Do not wipe windshield when dry or with towel as dirt particles may scratch surface.

Apply plastic cleaner per instructions on container to remove small scratches in windshield.

21. SEAT AND HANDRAILS

Maintenance

Proper cleaning of the seats will maintain their appearance and increase their usable life. See Seat Cleaning Chart.

CAUTION

Do not use any harsh detergents or cleaning solvents that contain ammonia, aromatic solvents or alkali materials.

Removal – ParCar (Figure 36)

a. Lift front of clam shell body to full upright position and remove nut and washers holding limit strap to underside of clam shell body and lift body off.

WARNING

ParCar with angle bag rack – to secure body upright and avoid possible personal injury through accidental closing of body, remove body hold-up rod from clip and insert into slot in body frame.

b. Remove 8 nuts, lockwashers and flat washers from seat mounting studs.

c. Remove seat and handrail.

d. Install in reverse order.

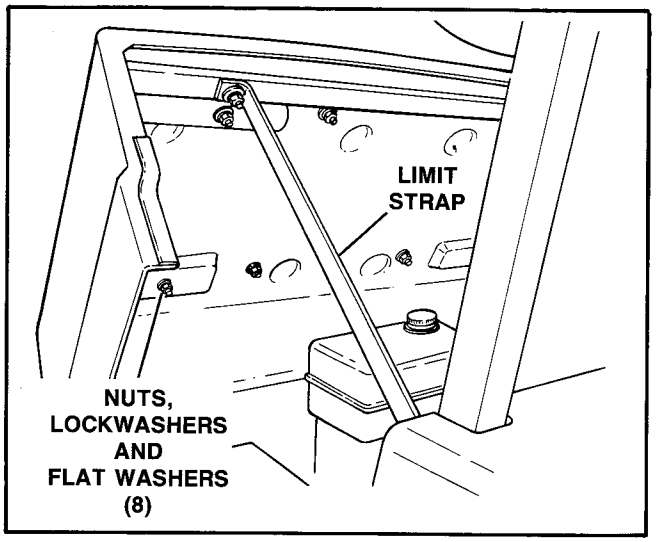

Figure 36 – Seat Removal

Removal – Utilitruck (Figure 37)

a. Tilt front seat up.

b. Remove bolts from hinge. Lift seat out of vehicle.

c. Remove screws from seat hinge and remove hinge.

d. Remove nuts, bolts, and washers from each side of seat frame and handrail. Lift frame and handrail off in a complete unit.

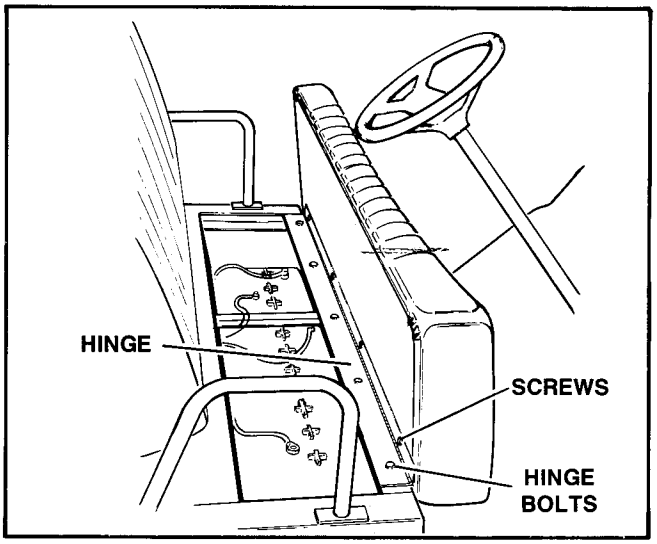

Figure 37 – Seat Removal

22. FRONT HOUSING

Removal – ParCar (Figure 38)

WARNING

Eye protection must be worn while drilling out rivets.

a. Pull up on housing trim. Drill out seven rivets using a 3/16 in. drill bit.

b. Drill out two rivets holding each side trim using a 3/16 in. drill bit.

c. Remove each side screw.

d. Remove screws, nuts and lockwashers from front housing shield.

e. Lift front housing off car.

f. Install front housing and trim in reverse order of removal using new rivets, Part No. 8693.

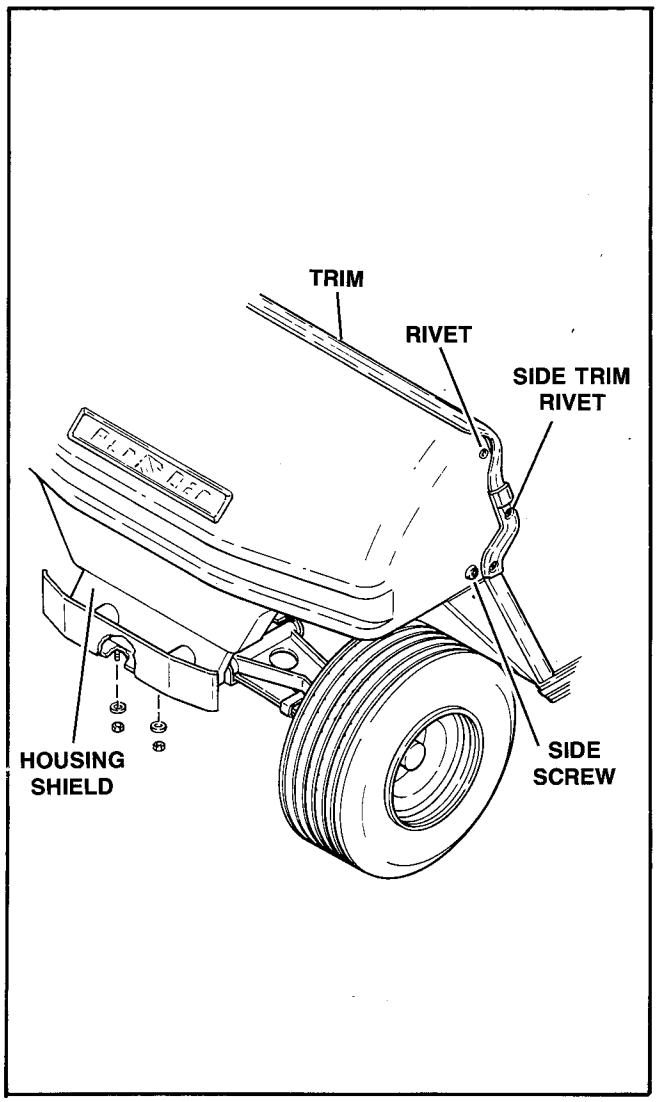

Figure 38 – Front Housing

Removal – Utilitruck (Figure 39)

WARNING

Eye protection must be worn while drilling out rivets.

a. Remove plastic bumper strip. Drill out rivets (13) and washers (15) using a 3/16 in. drill bit, then remove front housing shield (9).

b. Remove steering wheel per Paragraph 4, SECTION 3.

c. Remove floor mat molding (1), located at top of floor mat, by drilling out five rivets (2) with 3/16 in. drill.

d. Peel off floor mat.

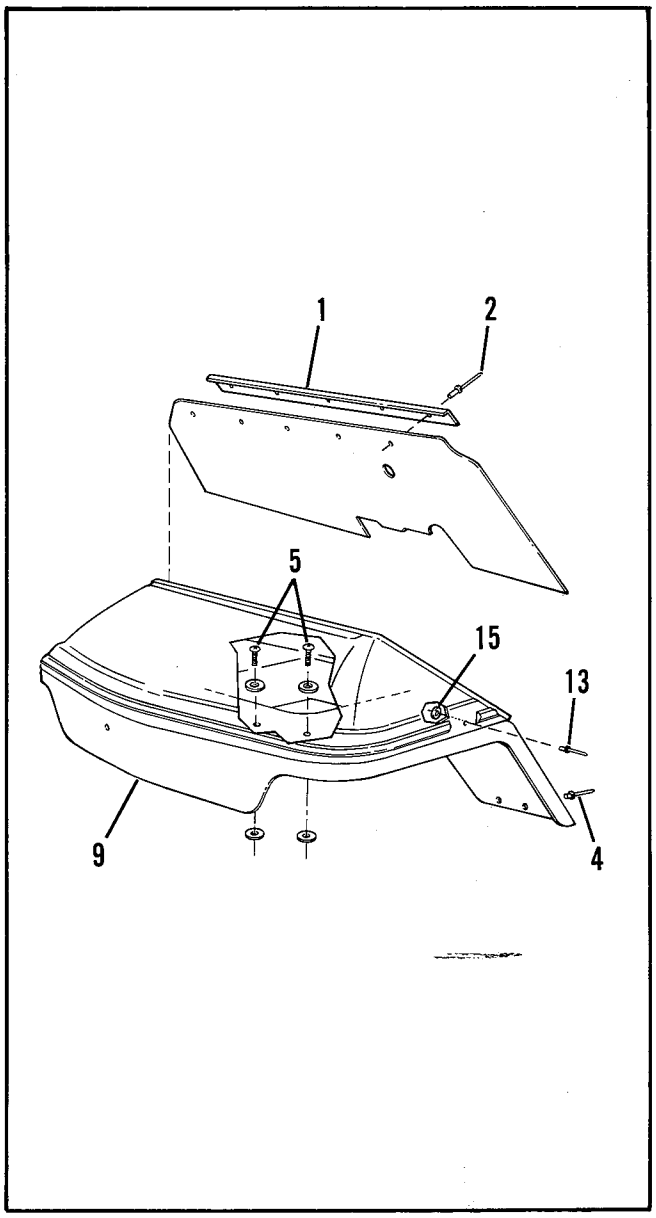

Figure 39 – Front Body Section

e. Drill out 13 rivets (4) along bottom of housing and around steering column with 3/16 in drill.

f. Remove four Phillips head screws (5) and washers located in well of front housing.

g. Lift front housing off car.

Installation (Figure 39)

WARNING

Read and follow precautions and handling instructions on contact adhesive container before using contact adhesive.

a. Glue four rubber washers on front housing front mounting bar with contact adhesive.

b. Place front housing on vehicle.

c. Install four Phillips head screws and washers through housing and rubber washers.

d. Rivet housing to floor board.

e. Glue floor mat to housing with contact adhesive.

f. Rivet floor mat molding to housing.

g. Install steering wheel in reverse order of removal, Paragraph 4, SECTION 3.

h. Install front housing shield onto front housing and secure with rivets (13), Part No. 8693, and washers (15). Install plastic bumper strip.

23. REAR BODY

ParCar (Figure 40)

a. Open body and disconnect limit straps. Close body.

b. With body in closed position:
(1) Reach under rear body and remove two bolts from each hinge and lift body off.
(2) P4E & P4G – remove front body by tilting body forward and lifting it off.

c. Install in reverse order.

Utilitruck (Figure 41)

a. Remove the cotter pin, washer, brace and wave spring from each side of frame.

b. Remove hinge bolts.

c. Carefully lift off body.

d. Install in reverse order.

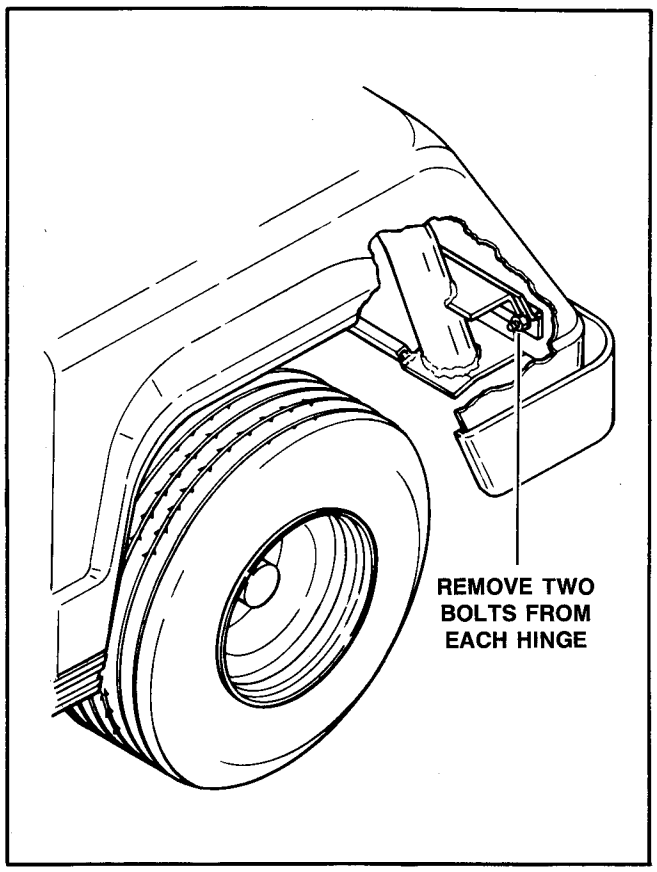

Figure 40 – Rear Body Removal

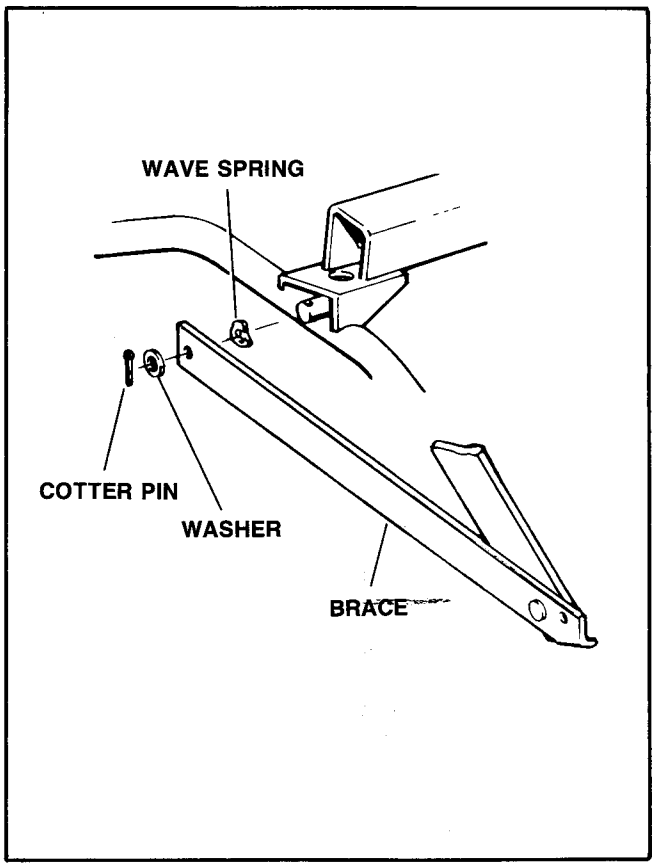

Figure 41 – Rear Body Removal

24. ANGLE BAG RACK (Figure 42)

a. Raise the vehicle body.

WARNING

ParCar with angle bag rack – to secure body upright and avoid possible personal injury through accidental closing of body, remove body hold-up rod from clip and insert into slot in body frame.

b. Remove the bolt and lockwashers from each side of the bag rack. Pull bag rack free from body.

c. Install bag rack by pushing it through the holes in the rear of the body. Fasten it to the body bross brace using the lockwashers and bolts. Make sure rubber grommets in body holes are in place. Tighten bolts to 18 ft.-lbs. (2.4 kgm) torque.

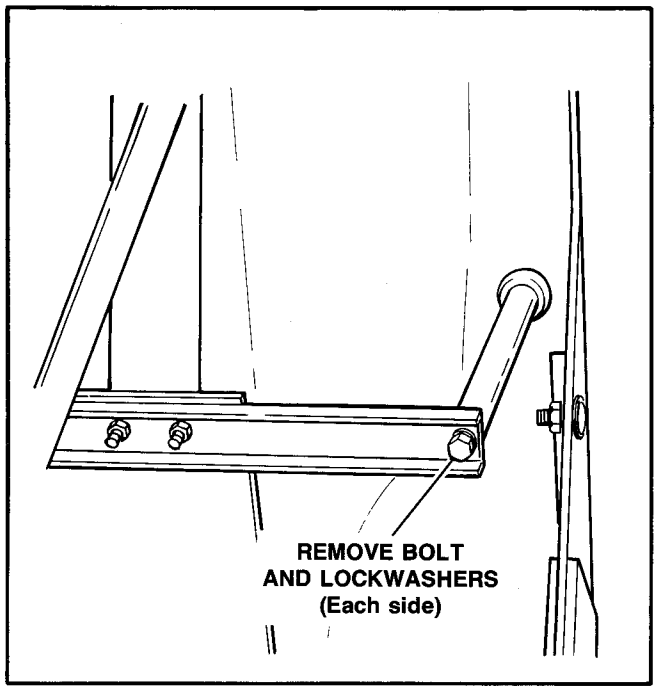

Figure 42 – Angle Bag Rack

25. STAND-UP BAG RACK (Figure 43)

a. Raise the vehicle body.

b. Remove washers, lockwashers and nuts from under body from each side of bag rack.

c. Remove nuts and washers from tube and lift out bolts from each side.

d. Lift out bag rack.

e. Install bag rack in reverse order.

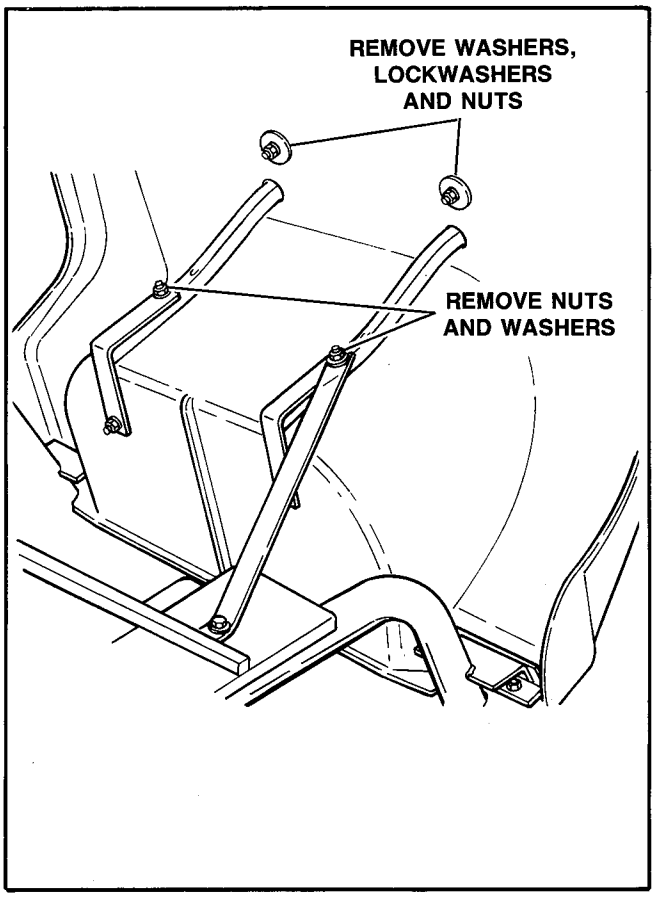

Figure 43 – Stand-Up Bag Rack

SECTION 7
ParCar ENGINE

SPECIFICATIONS

GENERAL

Type ..... Reversible – two cycle
Number of cylinders ..... One
Cooling ..... Blower air cooled
Mounting ..... Rubber
Bore ..... 2.75 in. (70 mm)
Stroke ..... 2.50 in. (64 mm)
Displacement ..... 14.85 cu. in. (245.8 cc)
Compression ratio (full stroke) 1.7:1
(after port closing) 6.0:1

PISTON

Fit in cylinder ..... .004-.005 loose at skirt bottom
Piston ring end gap ..... .007-.023 in.
Piston ring side clearance ..... .0025-.0045 in.
Piston pin fit in piston ..... .0001 in. tight to .0001 in. loose light hand press at 72° F.

CONNECTING ROD

Fit on crankpin ..... .0004-.0018 in.
Piston pin fit ..... .0002-.001 in.
End play between crankshaft throws ... .010-.018 in.

CRANKSHAFT ASSEMBLY

Crankpin ..... Must resist on turning torque of 350 ft.-lbs.
Mainshaft maximum runout
When turned on bearing journals –
Fan and transmission side ..... .002 in.
When turned on bearings in crankcase –
Fan and transmission side ..... .006 in.

CRANKCASE ASSEMBLY

Main bearings fit in crankcase ..... 0-.0015 in. tight
Main bearings fit on shaft –
Ball ..... 0-.0007 in. tight to .0001 in. loose
Roller ..... 0-.0009 in. tight to .0001 in. tight

TIMING

Transfer port from crankcase to cylinder
Opens at .... 54° ± 1° BBC (2.08 in. below TDC)
Closes at .... 54° ± 1° ABC (2.08 in. below TDC)
Exhaust port
Opens at .... 69° ± 1° BBC (1.84 in. below TDC)
Closes at .... 69° ± 1° ABC (1.84 in. below TDC)

TORQUES

Cylinder head bolts ..... 20-25 ft.-lbs. (2.7-3.4 kgm)
Engine mounting nuts .... 30-35 ft.-lbs. (4.1-4.8 kgm)
Spark plug ..... 15-20 ft.-lbs. (2.0-2.7 kgm)
Crankcase screws ..... 84-108 in.-lbs. (.97-1.2 kgm)
Crankcase stud nut .... 84-108 in.-lbs. (.97-1.2 kgm)
Fan shroud screws ..... 84-120 in.-lbs. (3.2-4.5 kgm)
Exhaust flange nuts ..... 15-20 ft.-lbs. (3.4-4.1 kgm)
Fan mounting nut ..... 50-70 ft.-lbs. (6.9-9.6 kgm)
Breaker plate screws ..... 29-35 in.-lbs. (.2-.4 kgm)
Air shroud screws ..... 35-50 in.-lbs. (3.2-4.5 kgm)
Intake manifold bolts ..... 12-16 ft.-lbs. (5.4-7.2 kgm)
Engine stabilizer bolts .... 12-16 ft.-lbs. (5.4-7.2 kgm)
Tensioner nut ..... 84-108 in.-lbs. (.97-1.2 kgm)
Starter-generator bolts .... 12-16 ft.-lbs. (5.4-7.2 kgm)
Oil pump mounting screws ..... 35-40 in.-lbs. (3.2-3.6 kgm)

TOOLS

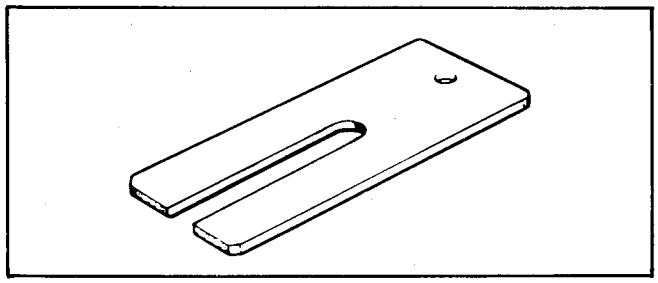

Part No. 94403-80 Connecting Rod Holding Plate

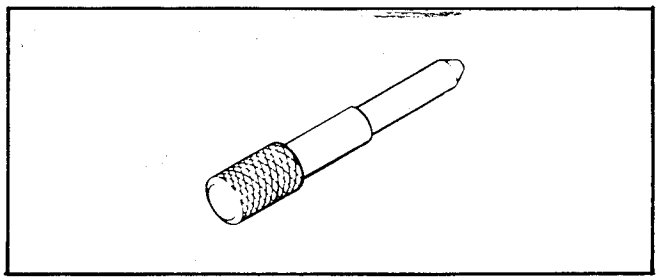

Part No. 96777-72 Drift Tool

DESCRIPTION AND OPERATION

The ParCar engine is a single cylinder 2-cycle, air-cooled engine. The engine has two major component assemblies – cylinder and crankcase.

The cast iron cylinder assembly includes an aluminum head, gasket and aluminum piston. The cylinder and head are bolted to the engine crankcase. The gasoline charge is admitted to the cylinder and the exhaust gas flows from the cylinder through ports in the cylinder wall.

During the upstroke of the piston, a vacuum is created in the crankcase and the reed valve opens drawing a gasoline and air mixture from the carburetor into the crankcase. At the same time, compression of the previous charge takes place above the piston.

After ignition, on the downward power stroke of the piston, the exhaust gas flows from the cylinder. At the same time, gases in the crankcase are compressed and forced up through the cylinder transfer ports, into the combustion chamber as the descending piston uncovers these ports.

The linear motion of the piston in the cylinder is translated into circular motion in the crankcase. The crankshaft consists of an off-center crank pin interposed between two counterweighted crank throws which rotate on two end shafts supported by anti-friction bearings. One end of the shaft drives the automatic transmission. The lower end of the connecting rod is fitted with roller bearings and connected to a single crank pin. Rod upper bearing is of the retained needle roller bearing type.

The crankshaft makes one revolution for intake, compression, power and exhaust events, firing every time the piston reaches the top of its stroke.

Ignition is produced by operation of a module, ignition coil, and spark plug. The making and breaking the electrical circuit of the module by an eccentric cam, determines the spark timing.

26. ENGINE

Removal of the engine is necessary to repair rod bearing and perform crankcase work. It is not necessary to remove the engine for top end repair of cylinder and piston. Refer to the individual sections for repair procedures.

Removal

a. Raise the vehicle body.

WARNING

ParCar with angle bag rack – to secure body upright and avoid possible personal injury through accidental closing of body, remove body hold-up rod from clip and insert into slot in body frame.

WARNING

Disconnect the battery cables (negative cable first) to prevent accidental start up of vehicle and possible personal injury.

b. Remove all hardware from starter-generator, then remove the starter-generator from the engine and place it behind the battery on the frame.

c. See Figure 44. Disconnect fuel line at the fuel pump. Disconnect oil injection feed line at oil pump. Loosen the air cleaner hose clamp at the carburetor and pull hose free of carburetor. Disconnect choke and throttle cables at carburetor. Disconnect the coil wires. Disconnect governor cable, governor arm, and ground strap.

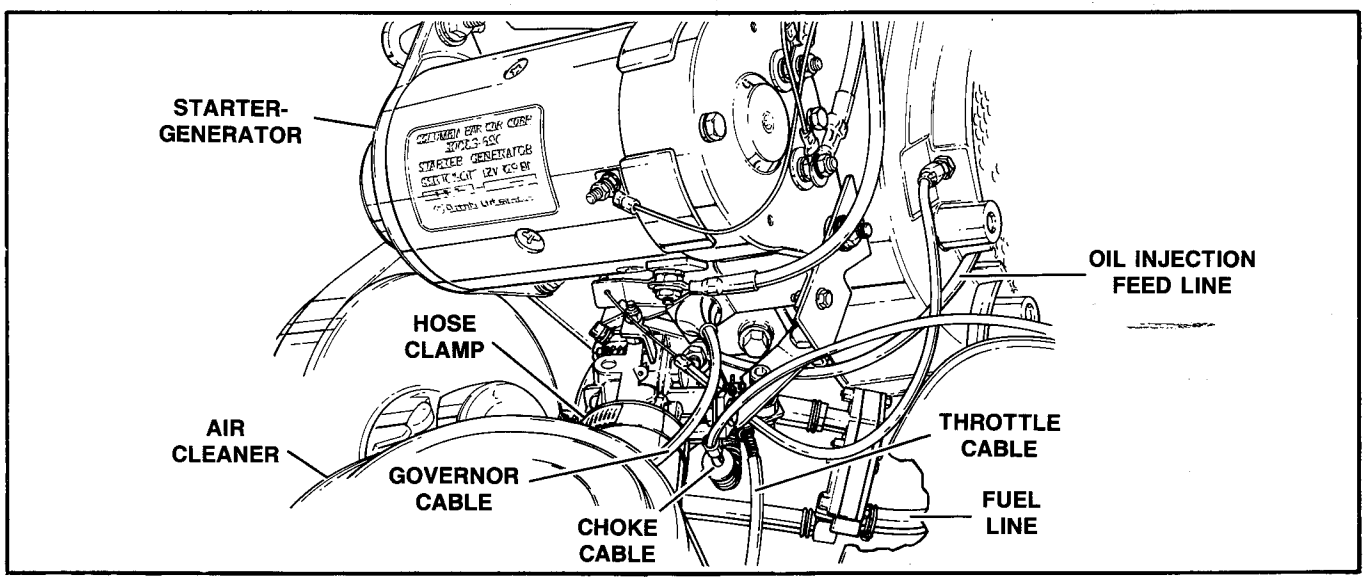

Figure 44 – Engine Removal

d. Remove the drive belt as described in Paragraph 34, SECTION 9.

e. Remove two muffler mounting bolts. Disconnect the exhaust pipe at the cylinder and remove the exhaust system.

f. See Figure 45. Disconnect the stabilizer from the engine. Remove the engine mounting hardware. Remove the engine from the frame.

Inspection and Repair of Motor Mounts (Figure 45)

a. Inspect the engine mounts and rivets. Replace any that appear loose, worn or broken.

b. To replace the engine mount, drill out the rivets and remove the mount. Install a new mount using new pop rivets.

Installation

a. See Figure 45. Place the engine in the frame. Secure the engine to the mounts using the original hardware. Secure engine ground strap to left front motor mount bolt. Tighten the bolts and nuts to 30-35 ft.-lbs. (4.1-4.8 kgm) torque.

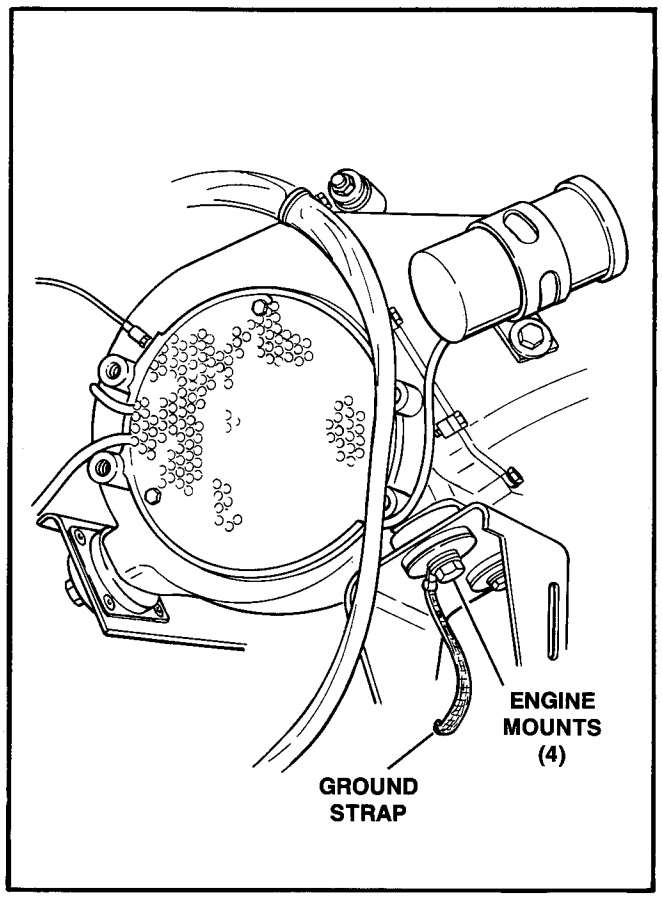

Figure 45 - Motor Mounts

b. Connect the stabilizer to the top of the engine. Adjust the stabilizer so there is no pressure on the rubber mounts, then tighten the locknuts.

c. Install the exhaust assembly using a new flange gasket.

d. Install drive belt by placing it on the primary flange first and then rolling it onto the secondary.

e. See Figure 44. Install air cleaner hose to carburetor and tighten clamp. Secure the fuel line to the fuel pump. Install oil injection feed line to oil pump.

f. See Figure 44. Connect throttle and choke to carburetor and governor cable to governor arm.

g. See Figure 44. Install the starter-generator and cable guide. Connect coil and solenoid wires.

h. Reconnect the battery cables.

i. Check for fuel leaks, etc. See FUEL SYSTEM, SECTION 8.

j. Check the ignition timing. See ELECTRICAL, SECTION 10.

k. Lower the body.

27. CYLINDER AND PISTON

Disassembly

a. Raise the vehicle body.

WARNING

ParCar with angle bag rack - to secure body upright and avoid possible personal injury through accidental closing of body, remove body hold-up rod from clip and insert into slot in body frame.

WARNING

Disconnect the battery cables (negative cable first) to avoid accidental start up of the vehicle and possible personal injury.

b. Remove the two muffler mounting bolts. Disconnect the exhaust pipe at the cylinder and remove the exhaust system.

c. Disconnect the spark plug wire from the plug.

d. See Figure 46. Remove the top shroud bolts and washers.

e. See Figure 46. Remove coil. Remove the shroud screws and shroud.

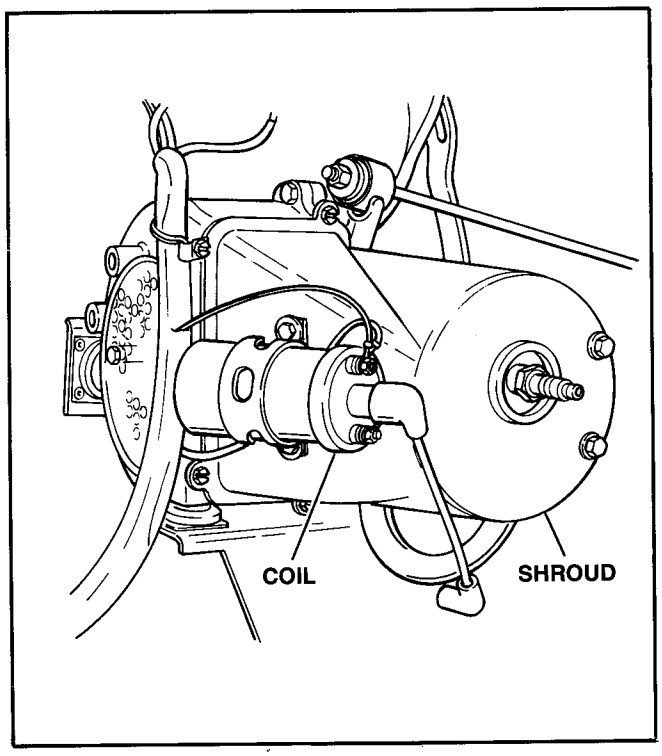

Figure 46 – Shroud Removal

f. See Figure 47. Remove spark plug, cylinder head bolts and washers and cylinder head.

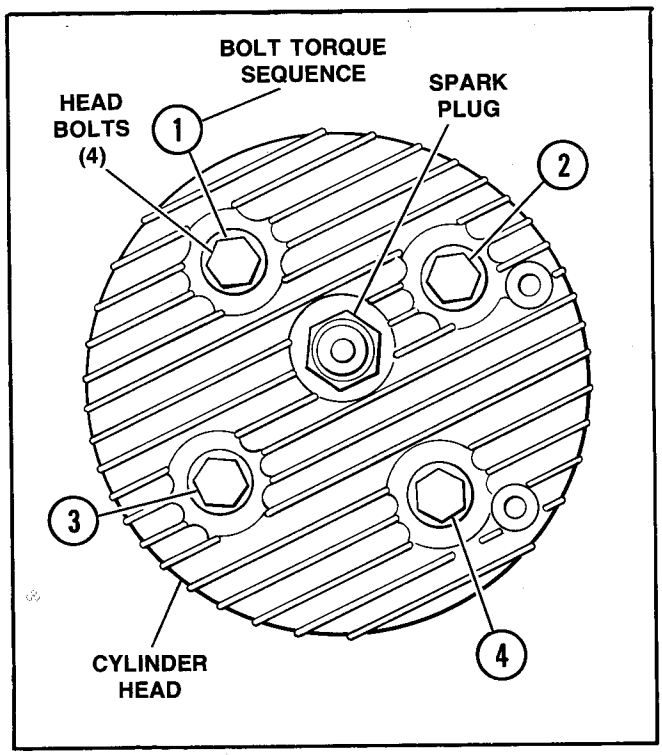

Figure 47 – Cylinder Head Removal

g. Turn the engine over until the piston is at top dead center. Lift the cylinder far enough to place a rag into the crankcase opening, this will prevent any foreign matter from getting into the crankcase. Remove cylinder and locating ring dowel.

h. If rings are to be replaced, remove the top piston ring, then the second.

NOTE: Before removing piston, check to see if the connecting rod is bent by using the CONNECTING ROD HOLDING PLATE Part No. 94403-80. Place the plate under the piston as shown in Figure 48. If the carburetor side or exhaust side of the piston fail to seat squarely on the plate, the rod is bent and must be replaced. See CRANKCASE, Paragraph 28, this section.

CAUTION

Support piston and connecting rod so rod is not bent while removing the piston pin.

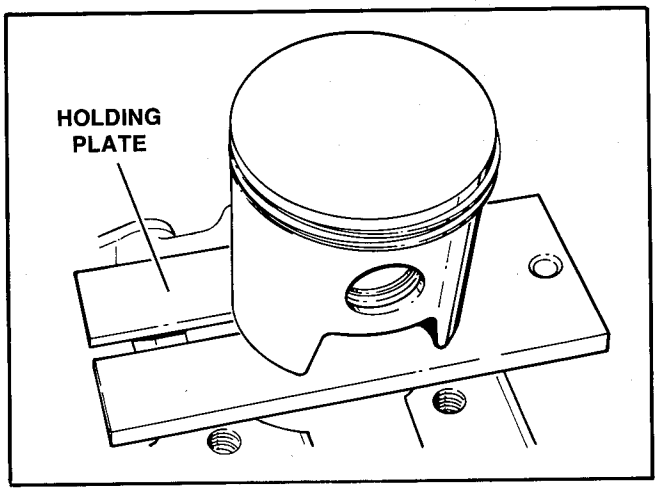

Figure 48 – Connecting Rod Inspection

i. See Figure 49. Remove both piston pin retaining rings using pliers. Heat the piston pin bosses and remove the pin by drifting it out using the PISTON PIN TOOL, Part No. 96777-72.

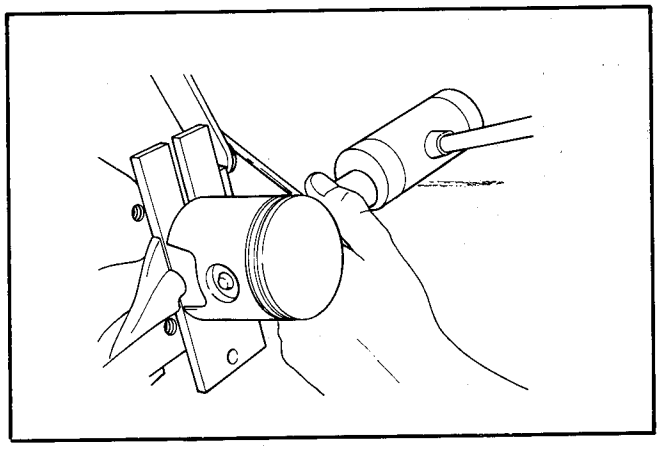

Figure 49 – Piston Pin Removal

j. Remove the cylinder base gasket.

Cleaning and Inspection

CYLINDER HEAD

a. Clean the head with a nonflammable solvent.

b. Bead blast or scrape carbon deposits from head. When scraping carbon, be careful to avoid scratching or nicking the cylinder head, combustion chamber or joint faces.

c. Inspect spark plug port threads for damage. If threads are damaged, replace the head.

d. Smooth any damaged spots in the combustion chamber using a small grinder. Sharp edges in the combustion chamber may cause pre-ignition. DO NOT remove any more material than is necessary or change the shape of the combustion chamber.

CYLINDER

a. Wash thoroughly in a nonflammable solvent.

b. Inspect the cylinder walls for gouging or scoring. Scored cylinders will require refinishing to oversize.

c. Scrape carbon and lead deposits from the exhaust port and top of cylinder bore and exhaust outlet chamber. Be careful to avoid damaging the cylinder.

PISTON

a. Wash thoroughly in a nonflammable solvent.

b. Remove the rings and clean all deposits from the ring grooves.

c. Check to make sure the piston ring locating pins are not loose in the piston. If they are loose, replace the piston.

NOTE: A used piston ring, broken in half and ground to a chisel point, can be used to clean the ring grooves. Use caution not to damage the locating pin.

d. Scrape carbon and lead deposits from the top of the piston. Be careful not to gouge the aluminum.

MEASURING CYLINDER AND PISTON

Measure piston and cylilnder to determine if they are worn to the point where cylinder must be rebored and an oversize piston installed.

NOTE: Inside and outside micrometers should be checked and adjusted to read exactly the same as shown in Figure 50.

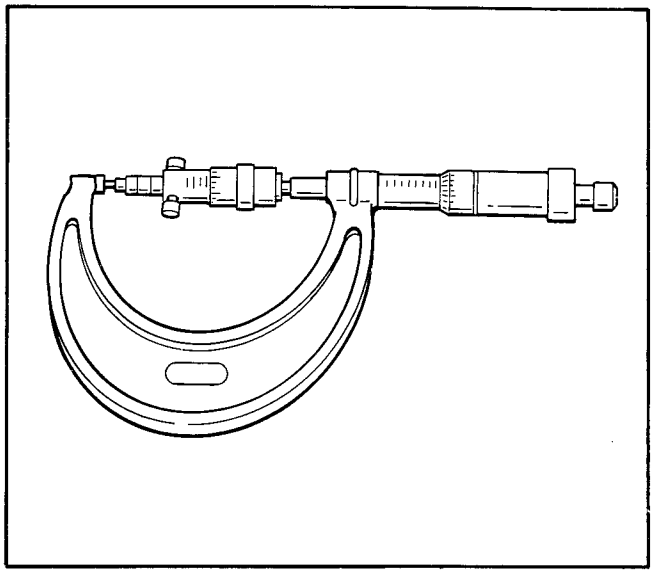

Figure 50 – Tool Check

a. If cylinder is in good condition, remove cylinder wall glaze with a No. 220 grit hone.

b. See Figure 51. Take cylinder bore measurement 3/4 in. from top of bore, measuring from front to rear, then left to right. Record the measurements.

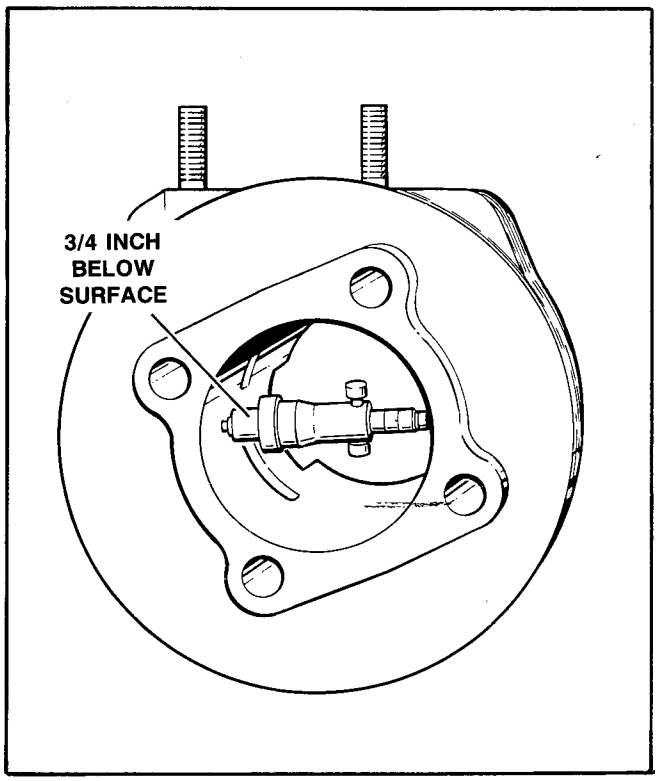

Figure 51 – Cylinder Bore Measurement

c. See Figure 52. Take cylinder bore measurement 2 in. from bottom of bore, measuring from front to rear, then left to right. Record the measurements.

d. See Figure 53. Measure piston at bottom of skirt, 90° from piston pin bore.

e. If the difference between front-to-rear and left-to-right measurements exceed 0.001 in., the cylinder is out of round, and should be refinished to the next O.S. piston.

f. If the measurements in Step c vary more than 0-.0015 in. from the measurements in Step b, the cylinder has excessive taper and should be refinished to the next O.S. piston.

g. Subtract the measurement in Step d from Step b to obtain piston-to-cylinder clearance. If it exceeds 0.010 in., cylinder clearance is excessive and should be refinished to the next O.S. pistion.

h. If piston and cylinder are out of specifications (see specifications) proceed to FITTING PISTON IN CYLINDER. If they are within specs and not scored, new rings may be fitted after cylinder is refinished.

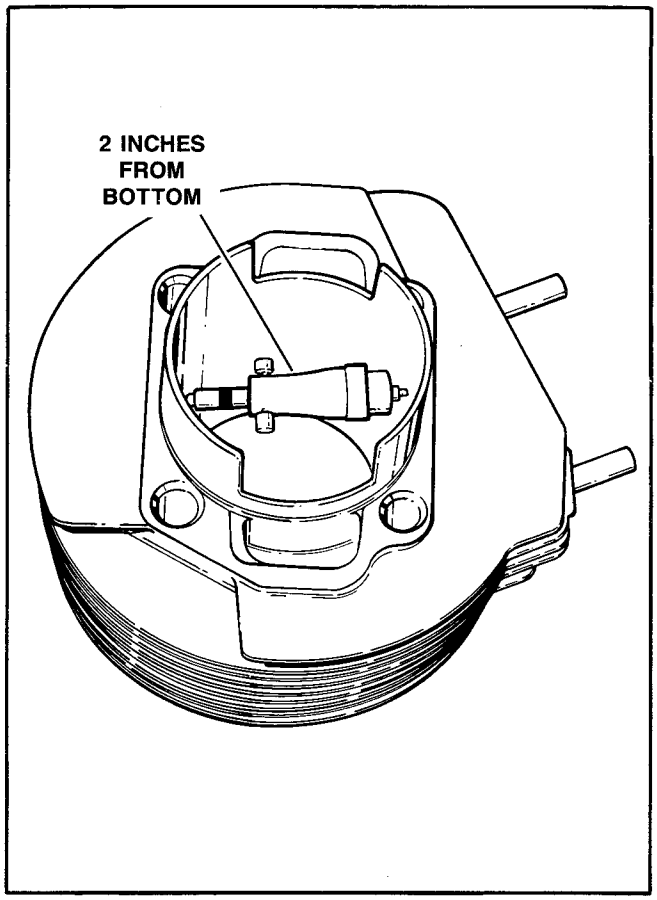

Figure 52 – Cylinder Bore Measurement

FITTING PISTON IN CYLINDER

Pistons are available in standard .010, .020, .030 and .040 in. oversize. The cylinder may be bored and final honed, or rough honed and final honed to fit any of the above pistons. Piston-to-cylinder clearance is .004-.005 in. See Measuring Cylinder and Piston.

Always measure the piston to be used in any given cylinder before machining because the cylinder must be final honed to match piston.

NOTE: Columbia does not recommend the use of spring tension cylinder hones. Use a high quality expandable rack hone such as SUNNEN® No. AN-111.

a. Measure the cylinder to determine smallest size piston that can be used.

b. Measure new piston at bottom of skirt 90° from piston pin bore.

c. Bore or rough hone cylinder .002 in. larger than piston being used.

d. Final hone the cylinder the last .002-.003 in. to achieve desired piston clearance of .004-.005 in.

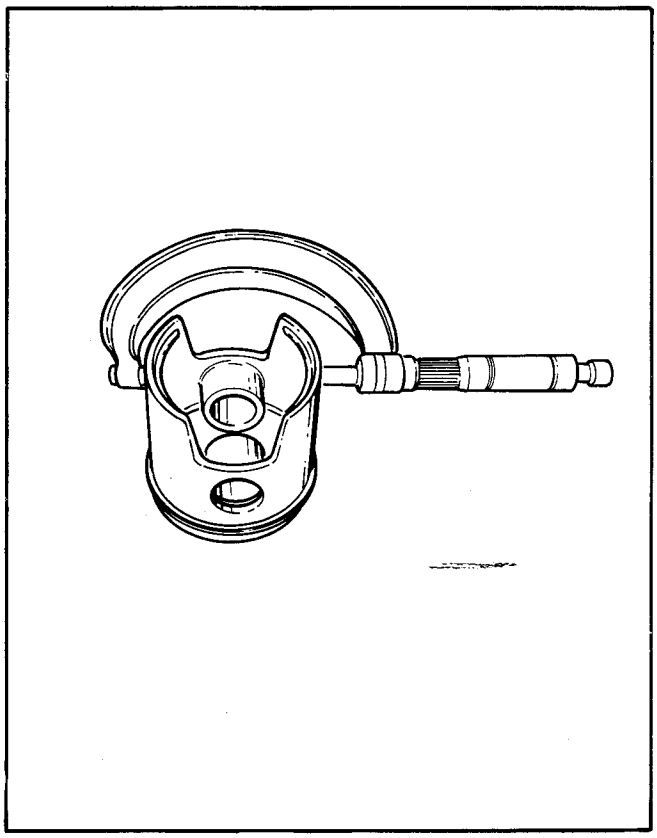

Figure 53 – Measuring Piston

EXAMPLE

Actual piston diameter (As measured)	2.749
Add clearance desired	+ .004
Final bore size after finish honing should be	2.753

First

Bore or rough hone	2.753
Cylinder to .002-.002 in.	– .002
Less than final bore size	2.751

Then

Finish hone cylinder the	2.751
Last .002-.003 in. to reach	+ .002
The final bore size of	2.753

e. After final honing, condition the cylinder surface as follows:

When using a rigid hone, use the following specifications:
Lubrication – kerosene
Grit – 150
Strokes – 10-25

When using a flex hone (Ball), use the following specifications:
Lubrication – 30 weight oil
Grit – 180 grit @ 1145 RPM for 1/2 minute
120 grit @ 1145 RPM for 35 strokes

f. Chamfer all edges of cylinder ports with a hand grinder to .010-.030 in. wide to prevent rings from catching on ports during operation.

g. After honing the cylinder, wash it in warm water with a strong detergent and dry thoroughly with compressed air to remove any abrasives from the pores in the cylinder. DO NOT WASH IN SOLVENT. Solvent will allow any abrasives to work even deeper into the pores. Any abrasives not removed will cause a lapping action on both the piston and rings resulting in rapid wear.

h. Coat the cylinder with 2-cycle oil to provide lubrication and prevent rust.

NOTE: Once the cylinder and piston have been fitted, keep them together as a matched set to ensure proper clearance.

PISTON RINGS

New piston rings should always be used whether a new or used piston is being installed.

The two rings are identical. They are plain rings with stepped ends, located in the piston prooves with pins. Rings are available in .010, .020, .030 and .040 in. Before installing new rings, perform the following steps:

a. See Figure 54. Check the side clearance of the rings in the piston grooves using a feeler gauge. Side clearance should be .002-.004 in.

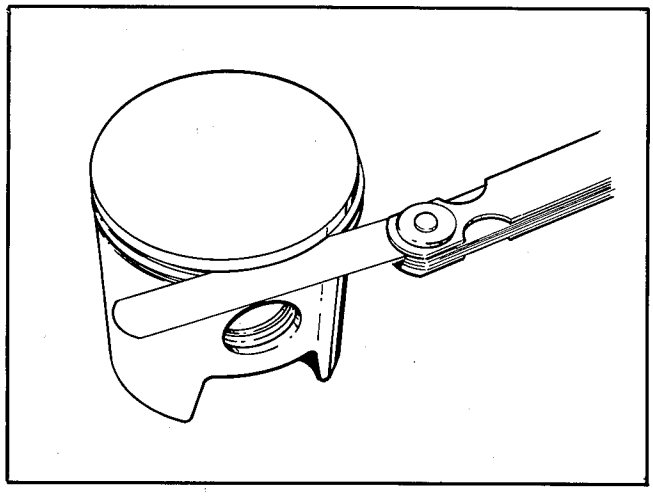

Figure 54 – Ring Side Clearance

b. See Figure 55. Check the ring gap clearances as shown. Place a ring in the cylinder, 1/2 in. from the top. Ring gap should be .007-.023 in. If ring gap is less, ring ends could butt against each other when the ring expands. This will cause the rings to break, damaging the cylinder and piston. Ring gaps may be increased by carefully filing excess material from ring ends.

CAUTION

Notch for ring retaining pin must also be enlarged if ring ends are filed.

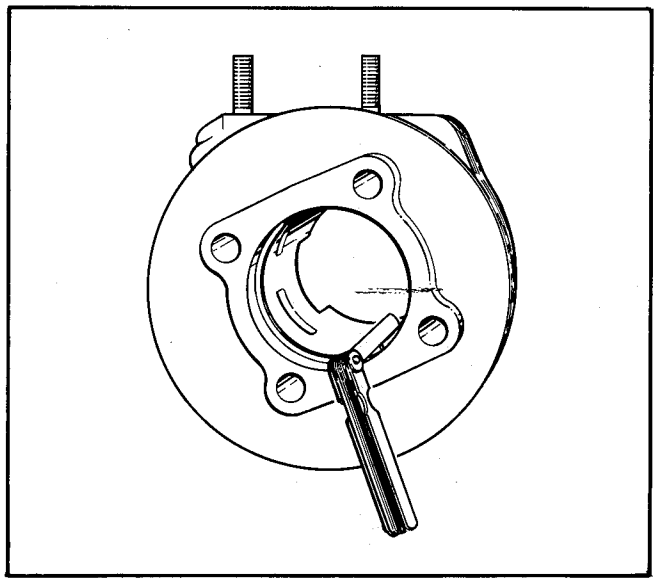

Figure 55 – Ring End Gap

PISTON PIN AND BEARING

a. The piston pin fit in the piston is .0001 in. loose at 72°. If the pin is too loose in the piston, both piston and pin must be replaced. Pistons and pins come as matched sets, so pins are not available in oversize.

b. The piston pin fit in the connecting rod is .0002-.001 in. (loose). When the pin fit exceeds these specs, replace the piston and pin along with the needle bearing in the connecting rod. Procedures for replacing the needle bearing are in Step a, CRANKSHAFT ASSEMBLY, this section.

Assembly

The dome of the piston has EX stamped on it. The side of the piston with these letters must face to the exhaust port.

a. Install a retaining ring into the piston. DO NOT use old rings because they are stretched during disassembly. Make sure retaining ring seats firmly in the groove.

b. Heat the piston at the pin bosses on both sides and install it and the pin on the connecting rod using the PISTON PIN TOOL, Part No. 96777-72. Tap piston pin into place with tool and a hammer.

CAUTION

Always pre-heat piston before installing piston pin otherwise piston and/or connecting rod damage may occur.

c. Install a new second retaining ring in the other piston pin groove. Make sure retaining ring seats firmly in the groove.

d. Install the piston rings on the piston. Install the bottom ring first, then the top ring. Make sure the locating pin in each ring groove is positioned in the ring gap. Also, be careful not to over-expand or twist the rings during installation.

CAUTION

Make sure cylinder to crankcase locating ring dowel is in its proper position in the recess machined around one cylinder mounting hole.

e. Remove all traces of old gasket from the crankcase and cylinder mating surfaces. Place new gasket and ring dowel in position on the crankcase.

f. Apply a light coat of oil to the piston, piston rings, crankshaft bearings and pin bearing. Carefully work the cylinder down over the piston. Compress each ring, one at a time, as the cylinder is slipped into position. The cylinder base is chamfered to assist in compressing the rings.

CAUTION

Do not turn or twist the cylinder when installing it or the piston rings may break.

g. Clean the cylinder and cylinder head mating surfaces. Install head gasket, cylinder head and bolts. See SPECIFICATIONS at the beginning of this section for cylinder head bolt torque. See Figure 47 for cylinder head bolt torque sequence. Tighten evenly, 10 ft.-lbs. at a time.

h. See Figure 46. Install the shroud, bolts and washers, screws, coil and screws.

i. Install spark plug. Tighten to 15-20 ft.-lbs. torque.

j. Install the exhaust system with new flange gasket.

k. Reconnect the spark plug wire and battery cables.

28. CRANKCASE

Disassembly

a. Remove engine, Paragraph 26, this section.

NOTE: When the crankcase is disassembled it is recommended that all seals and gaskets be replaced. Inspect bearings for damage when removed. Replace if necessary.

b. Remove the transmission primary drive as described in Paragraph 35, SECTION 9.

c. Remove the cylinder and piston, Paragraph 27, this section.

d. Remove the carburetor/manifold assembly as described in Paragraph 29, SECTION 8.

e. See Figure 56. Remove the stabilizer bolt and nut, screws and pull fan housing free.

f. See Figure 57. Place the CONNECTING ROD HOLDING PLATE, Part No. 94403-80, under rod upper end and remove the fan nut (1) and fan (2).

g. See Figure 58. Remove the crankcase screws (1). Tap lightly on the motor mount bosses and separate the crankcase halves slipping the crankshaft out of the transmission side of crankcase half.

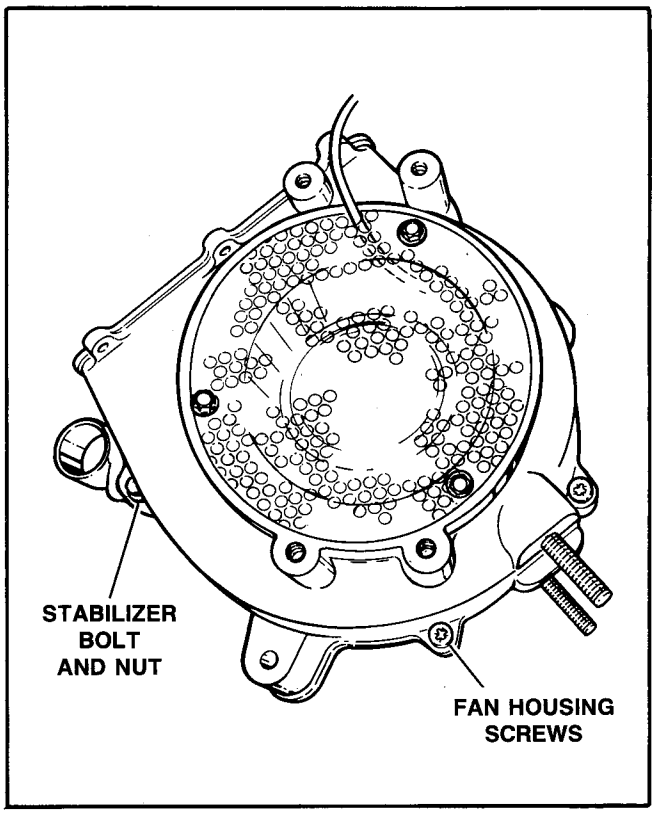

Figure 56 – Fan Housing Removal

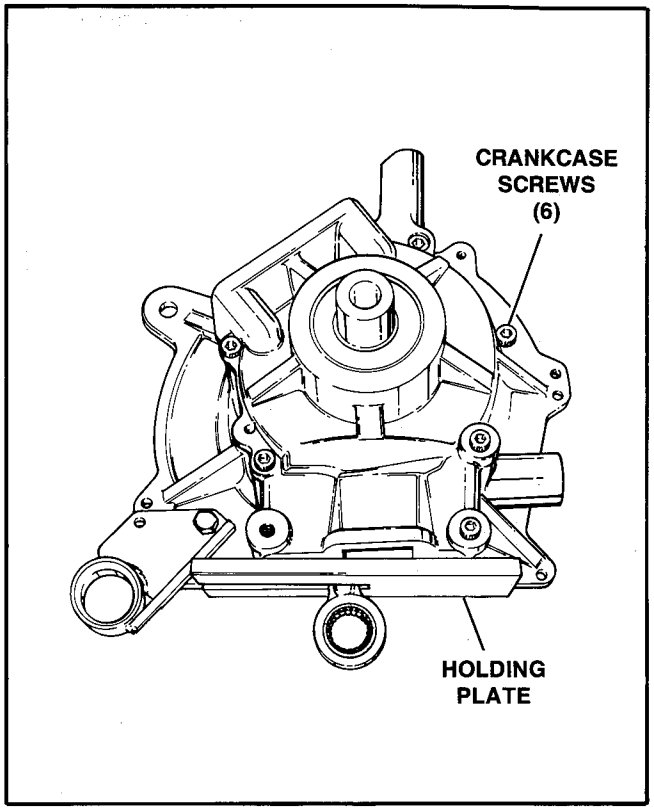

Figure 58 – Separate Crankcase Halves

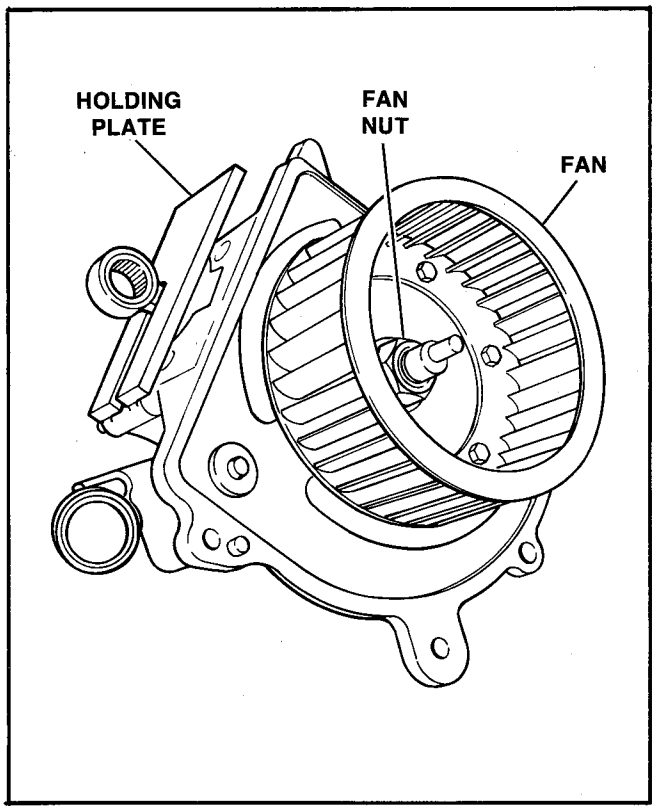

Figure 57 – Fan Removal

h. Press crankshaft out of fan side of crankcase half.

i. Pull out the oil seals (3), Figure 59.

NOTE: Retaining ring is tapered and must be installed with tapered edge facing fan.

j. Remove retaining rings (1) and tapered retaining ring (2) from the crankcase halves, Figure 59.

k. Remove spacer (5) and gasket (8), Figure 59.

l. Install crankcase halves on press bed and press crankcase bearings (4) out, Figure 59.

NOTE: When the crankcase is disassembled, it is recommended that the oil seals in the crankcase be replaced. Seals are damaged when removed.

CRANKSHAFT DISASSEMBLY (Figure 60)

a. Fabricate a press plate that will fit between the crankshaft. Using a suitable press plug, press the crankpin (1) from one side of the crankshaft. A press able to exert a six ton load will be required.

b. Remove the thrust washers (2), connecting rod (3), and bearing (4) from crankpin.

c. Press the crankpin (1) from the other side.

d. Remove inner race (6) and ring (7), using a suitable puller and wedge attachment. First pull ring (7) then inner race (6).

Cleaning and Inspection

a. Clean all parts in a nonflammable solvent and blow dry with compressed air.

b. Examine the rod (3) and thrust washers (2). Replace if damaged.

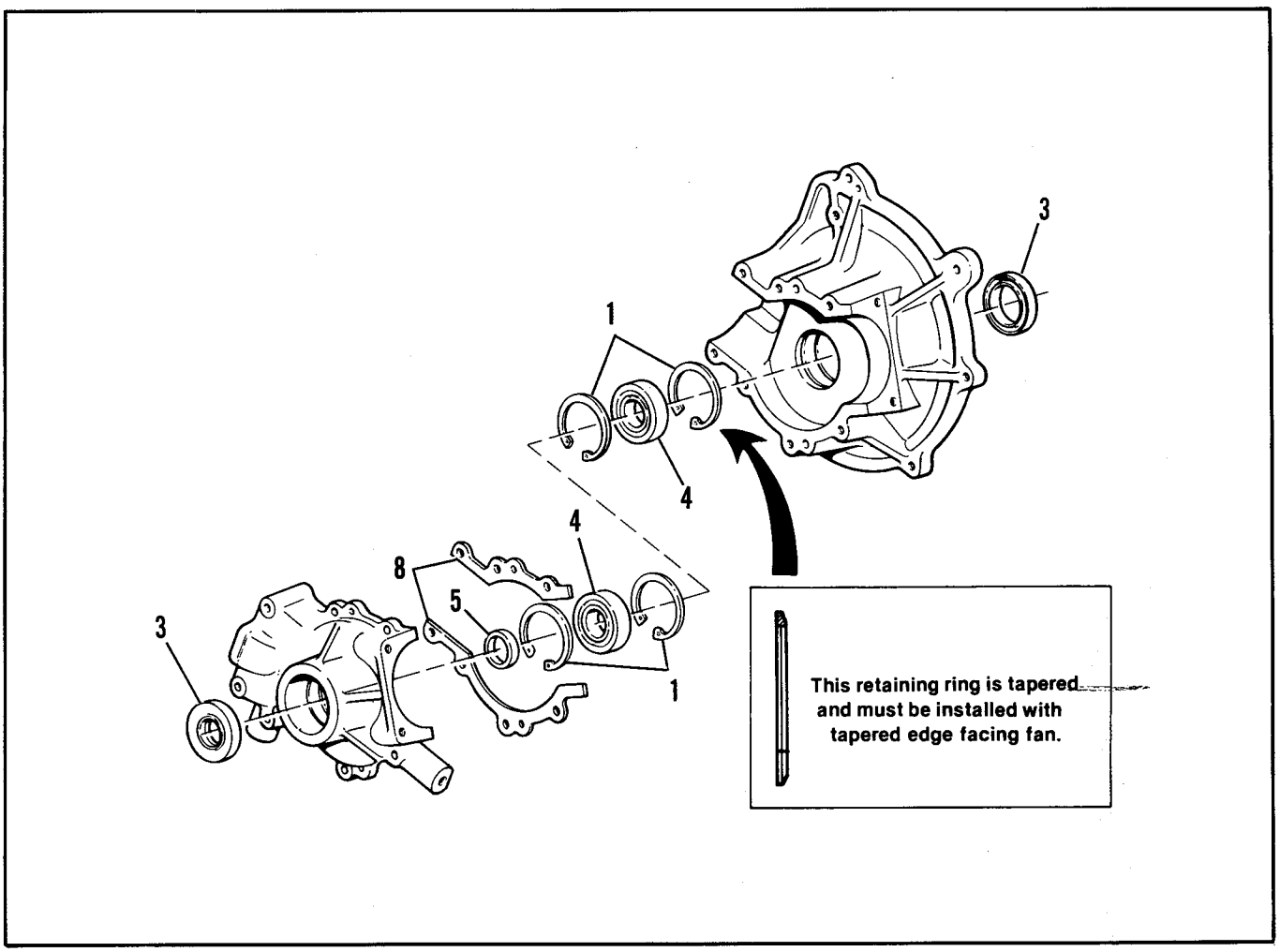

Figure 59 – Crankcase Oil Seals and Retaining Rings

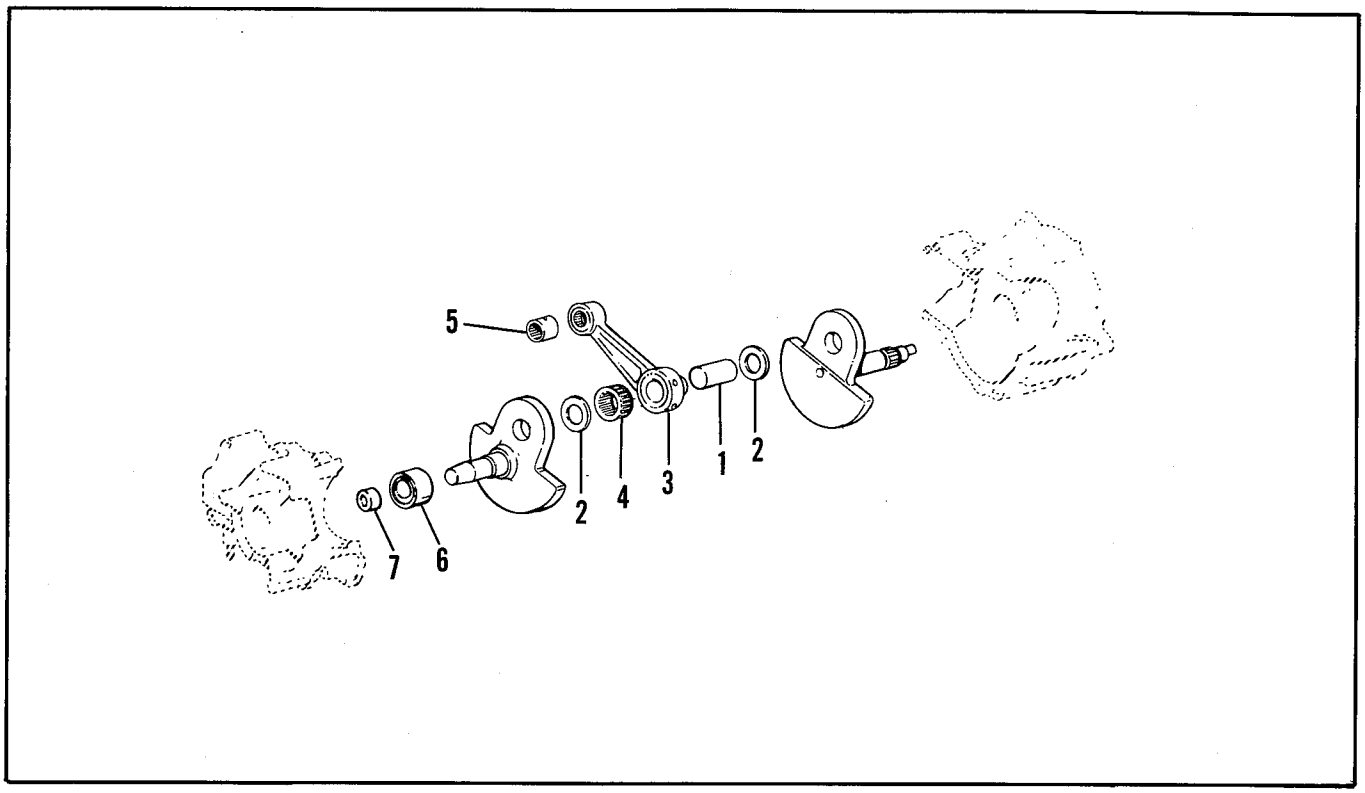

Figure 60 – Crankshaft

CRANKSHAFT ASSEMBLY (Figure 60)

a. If replacing the connecting rod bearing (5), press the needle bearing (5) from the connecting rod (3). Coat a new needle bearing with 2-cycle engine oil and press on lettered side of bearing into the connecting rod (3) upper end.

b. Place one crankshaft half on a press bed and press the crankpin (1) in until it is flush with the outside surface of the crankshaft.

c. Install bearing (4) and connecting rod (3) on the crankpin (1) with one thrust washer (2) on each side of the rod (3).

d. Place the outer crankshaft on the pin (1). Align the two crankshafts using a straightedge, then press the crankshaft assemblies together until the specified rod side clearance is obtained.

e. Clean with Scotch Brite Pad® (or equivalent) and apply Loctite "T" Primer® (or equivalent) to the shaft and inner surfaces of mainbearing inner race (6) and press ring (7). Apply Loctite 609® (or equivalent) to shaft.

f. Press inner race (6) and then press ring (7) on to crankshaft.

TRUING CRANKSHAFT

a. See Figure 61. Using a truing device and dial indicators as shown, check shaft.

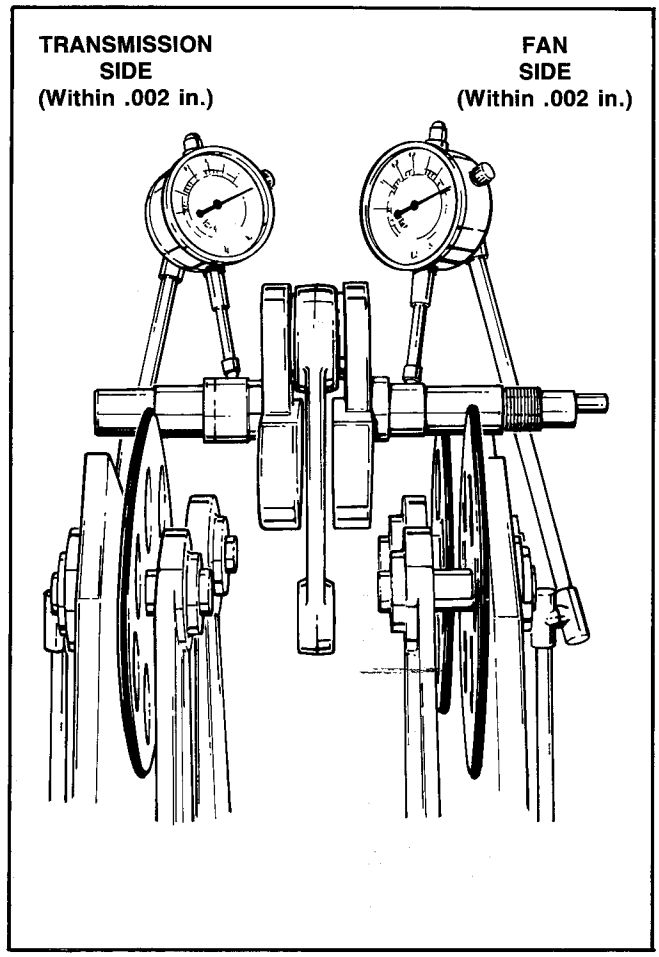

Figure 61 – Crankshaft Runout

b. See Figure 62. Shafts must run true within .002 in. on fan side and .002 in. on transmission side. Correct flywheel alignment as follows:
   (1) If the shafts run high as the crankpin passes the indicators, mark high spot with chalk, remove chalk from truing device, position wedge as shown and strike wedge. Remove wedge and take another reading. Repeat if same condition exists.
   (2) If the shafts run high as the crankpin passes directly opposite the indicators, install a C clamp on the bottom of the crank throw and apply pressure on the C clamp. Remove C clamp and take another reading. Repeat if same condition exists.
   (3) If one shaft runs high and the other low as the crankpin passes 90° from the indicators, the crank halves are scissored. Mark the high crank throw at point closest the indicator and remove crankshaft assembly from truing device. Place the low end on a soft surface and strike the marked crank throw on the mark firmly with a copper hammer. A steel hammer will damage the crankshaft. Reinstall assembly in turing device and take another reading. Repeat procedure if same condition exists.

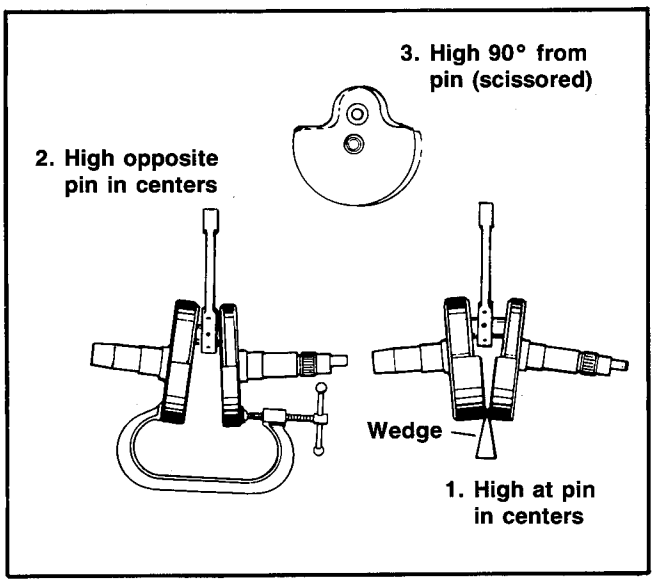

Figure 62 – Correcting Crankshaft Misalignment

Assembly (Figure 59)

NOTE: All bearings should be installed by pressing on the lettered side of the bearing.

NOTE: Retaining ring is tapered and must be installed with tapered edge facing fan.

a. Install the external retaining ring (1) and tapered retaining ring (2) to crankcase halves. Install new oil seals (3).

NOTE: Make sure all retaining rings properly seat in ring grooves.

b. Place the crankcase halves on a press bed and press in bearings (4). Install internal retaining rings (1).

c. Press the fan side of crankcase half on to the crankshaft, supporting the crankshaft between the cheeks, press with a sleeve on the ball bearing inner race.

d. Insert the crankshaft in the transmission side of case and gasket (8) into crankcase halves and install the crankcase screws (1), Figure 58. Tighten crankcase screw to 7-9 ft.-lbs. torque.

e. See Figure 57. Install fan (2) on the ignition point side of the crankcase. Using the CONNECTING ROD HOLDING PLATE, Part No. 94403-80, install the fan nut (2). Tighten the fan nut to 50-70 ft.-lbs. torque.

f. See Figure 56. Install fan housing (3), stabilizer bolt and nut (1) and fan housing screws (2).

g. Install the transmission primary drive, Paragraph 35, SECTION 9.

h. Install carburetor/manifold assembly, Paragraph 29, SECTION 8.

i. Install the cylinder and piston, Paragraph 27, this section.

j. Install engine, Paragraph 26, this section.

SECTION 8
FUEL SYSTEM

SPECIFICATIONS

JET SIZES

Part No. 27752-83 (Std.)	.038
Part No. 27753-82 (above 6,000 ft.)	.035

CAPACITY

Fuel Tank	(approximately 8 Gal. U.S. 32.2 Lt.)

TORQUES

Throttle shaft nut	20-25 in.-lbs.
Bolts, intake manifold	8-10 ft.-lbs.
Inlet valve	30-40 in.-lbs.
Main jet	20-25 in.-lbs.
Nuts, manifold	8-10 ft.-lbs.
Oil Pump Mounting Screws	25 in. lbs.
Oil Pump Banjo Fittings	30 in. lbs.
Intake Manifold Banjo Fitting	30 in. lbs.

29. CARBURETOR

The Columbia ParCar gasoline engine is equipped with a float type carburetor having an external fuel pump which operates on crankcase pulsations. Fuel is drawn from the gas tank by the fuel pump and passes through the inlet valve into the float chamber. The fuel entering the chamber causes the float to rise until it shuts off the fuel valve, stopping flow at a level predetermined by the float level setting.

Component Functions (Figure 63)

a. Idle Adjustment Needle: Adjust for correct amount of fuel delivered to the primary idle hole.

b. Primary Idle Hole: Main source of fuel to engine at the idle position.

c. First Progression Hole: Feeds air to primary idle hole at the idle position and fuel thru progression.

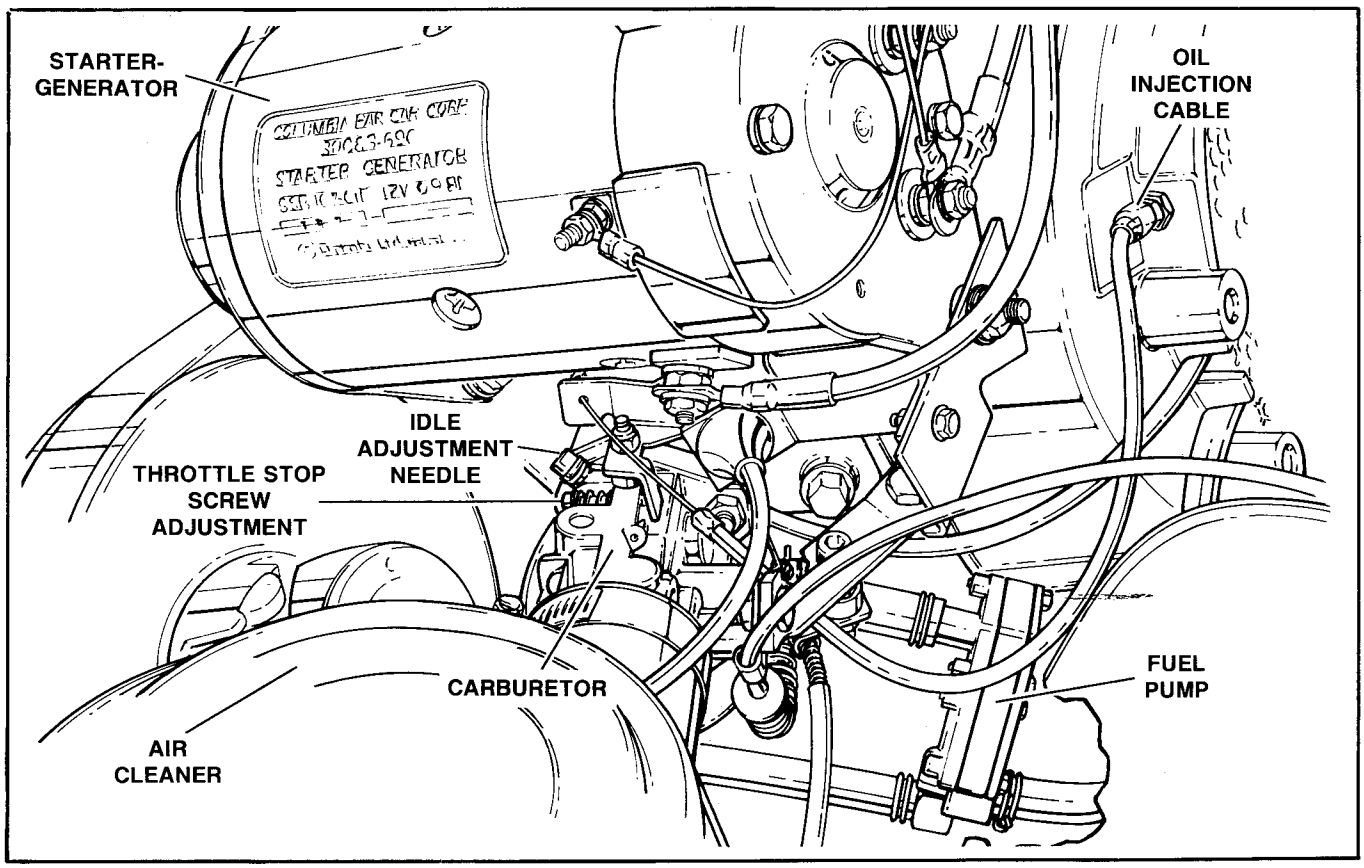

Figure 63 – Component Functions

d. Throttle Valve Assembly: Regulates engine speed as it opens to expose idle holes and nozzle.

e. Fuel Inlet: Fuel from gas tank enters carburetor here.

f. Inlet Needle Valve: Meters amount of fuel allowed into bowl by way of float function.

g. Float: Maintains a constant fuel level in bowl.

h. Main Jet: Meters amount of fuel delivered to nozzle and idle system.

i. Nozzle: Main source of fuel to the engine at the wide open throttle position.

j. Bowl Vent: Maintains atmospheric pressure onto fuel in the bowl.

k. Nozzle Well Vent: Meters air to the nozzle system.

l. Choke Valve Assembly: Used for cold starting. Closed at start position (choke control pulled out) allows manifold vac. to draw only fuel from nozzle and idle holes.

m. Idle Tube: Delivers fuel from bowl to idle progression holes.

n. Venturi: Velocity of air increases at this point to draw fuel from nozzle.

o. Idle Air Vent: Air enters here to create an emulsion of air and fuel at the idle position.

Adjustments

See LIFTING INSTRUCTIONS, SECTION 1. Raise the left rear wheel so that the wheel turns freely. Support the frame with suitable blocking and wedge the other wheels to keep the vehicle from moving.

CAUTION

When making carburetor adjustments, turn idle adjustment needle carefully and slowly. DO NOT force needle into seat.

NOTE: When making carburetor adjustments, pause for several seconds to allow the engine to respond to the new mixture settings.

Since most carburetors are fixed jet types the high speed cannot be adjusted. The main jet can be removed for cleaning or replacing. If replacment is necessary be sure to reinstall with the correct original equipment part.

When the engine is at the wide open throttle position, the main source of fuel is delivered from the carburetor nozzle. As the throttle valve assembly goes to the wide open position, the air entering the carburetor from the choke side creates a lower pressure at the nozzle that enables it to draw fuel from the float bowl by way of the main jet. The nozzle well vent allows air to enter and mix with fuel to create an emulsion of air and fuel. The nozzle, nozzle well vent and main jet are very critical parts to the carburetor and should never be modified in any way.

IDLE ADJUSTMENT (Figure 63)

With the engine at the idle position, the manifold vacuum draws air in from the choke side of the carburetor. A specific amount of this air enters the idle air vent to draw fuel from the idle tube. The first progression hole is exposed to the atmospheric air entering the carburetor and creates an emulsion of fuel and air that is delivered to the primary idle hole, as the engine's main source of fuel at the idle position. The function of the idle adjustment needle is to increase (counterclockwise) or decrease (clockwise) the amount of fuel delivered to the primary idle hole.

a. Connect a tachometer to the engine. Start the engine and run it at 1500-2000 rpm (fast idle).

b. Turn the Idle Adjustment needle in or out until engine runs smoothly. Normal setting is 3/4-1 turn open.

THROTTLE STOP SCREW ADJUSTMENT (Figure 63)

a. With the ignition off and the accelerator pedal fully released, back off screw until the throttle is fully closed, then turn screw back in a 1/4 turn.

b. Start up engine to check throttle operation. When the accelerator pedal is released, the throttle lever should return against the stop screw.

FLOAT LEVEL ADJUSTMENT (Figure 64)

a. Remove the carburetor per Removal, this section.

b. Remove the float bowl per Step a, Disassembly, FLOAT CHAMBER, this section.

c. Turn the carburetor upside down and adjust float so clearance between casting rim and the top of the float is 23/32 in.

d. The adjustment is made by bending the tab resting against the float valve.

e. Install the float bowl and the carburetor in reverse order of Steps a and b above.

f. When the accelerator pedal is fully released, the throttle lever must return against the stop screw.

g. Check and adjust the micro-switch per Paragraph 39, SECTION 10.

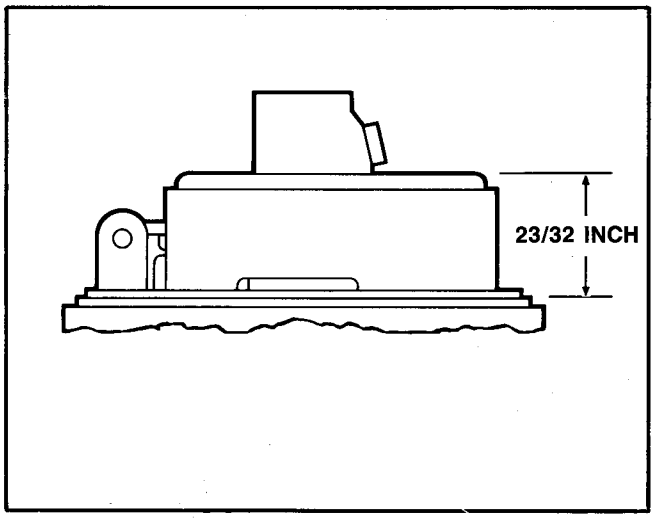

Figure 64 - Float Level Adjustment

GOVERNOR CONTROL ADJUSTMENT (Figure 65)

a. Start engine and set governor speed at 3150 rpm with one rear wheel off ground.

b. To increase rpm's loosen lockscrew (1) and slide cable block (2) toward front of vehicle. To decrease rpm's slide cable block toward rear of vehicle. Tighten screw securely after adjustment.

WARNING

Maximum governed speed is 12 mph (19.3 kph) (3150 rpm). Exceeding these figures can be hazardous, resulting in loss of control or loss of vehicle stability.

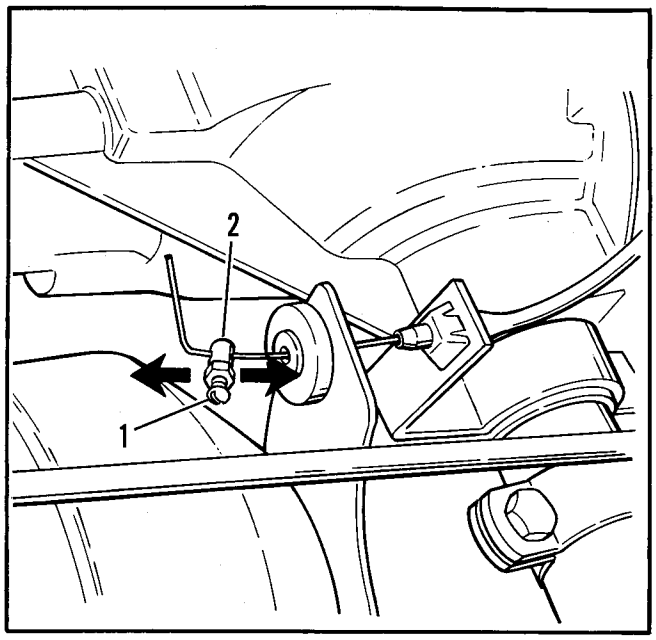

Figure 65 - Governor Control Adjustment

THROTTLE CONTROL LINK ADJUSTMENT

ParCar: (Figure 66)

a. Raise front of vehicle per LIFTING INSTRUCTIONS, SECTION 1.

b. Remove the cotter pin (1) and washer (20) then loosen the jamnuts (17) and allow rod (16) to hang free.

c. Reinstall accelerator rod to accelerator pedal bracket making sure rod (16) is only in block (14) 1/4 in. Retighten front nuts (17) on rod (16) attaching washer (20) and cotter pin (1) to rod.

d. With accelerator pedal fully depressed, loosen the screws (3) and move the casing (15) forward until it stops.

e. Pull back 1/8 in. then retighten screws (3) to refasten casing and retighten rear nuts (17) on casing (15).

Utilitruck: (Figure 67)

a. Raise front of vehicle per LIFTING INSTRUCTIONS, SECTION 1.

b. Disconnect spring (1) from linkage.

c. Remove the accelerator rod (2) from the accelerator pedal bracket (3).

d. Adjust rod for proper micro-switch operation (4).

e. Reinstall in reverse order.

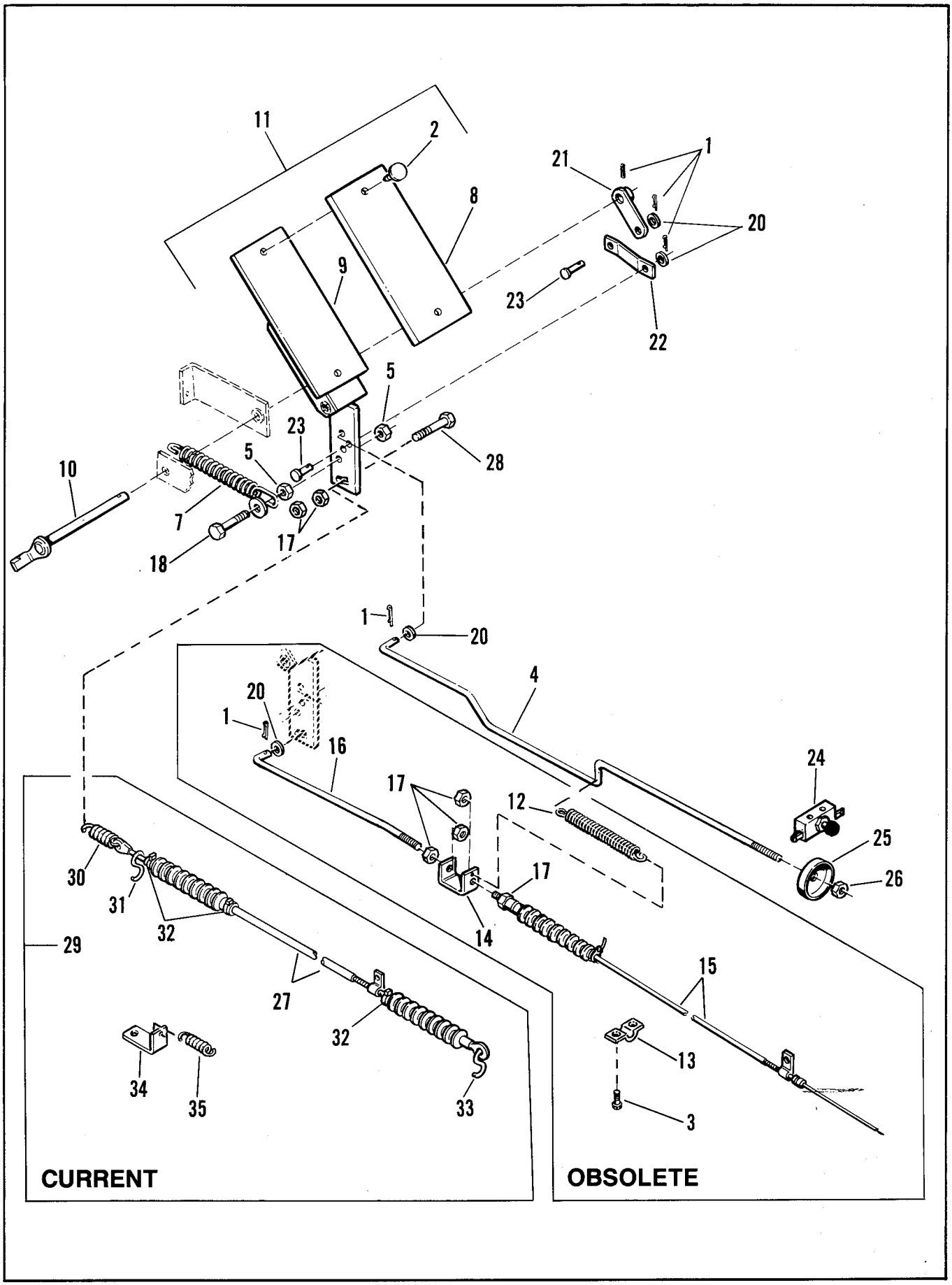
11
2
21
1
8
20
9
23
22
5
23
28
5
10
7
17
18
1
20
4
20
1
16
24
17
12
25
30
17
26
31
32
14
29
15
27
32
13
34
35
33
3
CURRENT
OBSOLETE

Figure 66

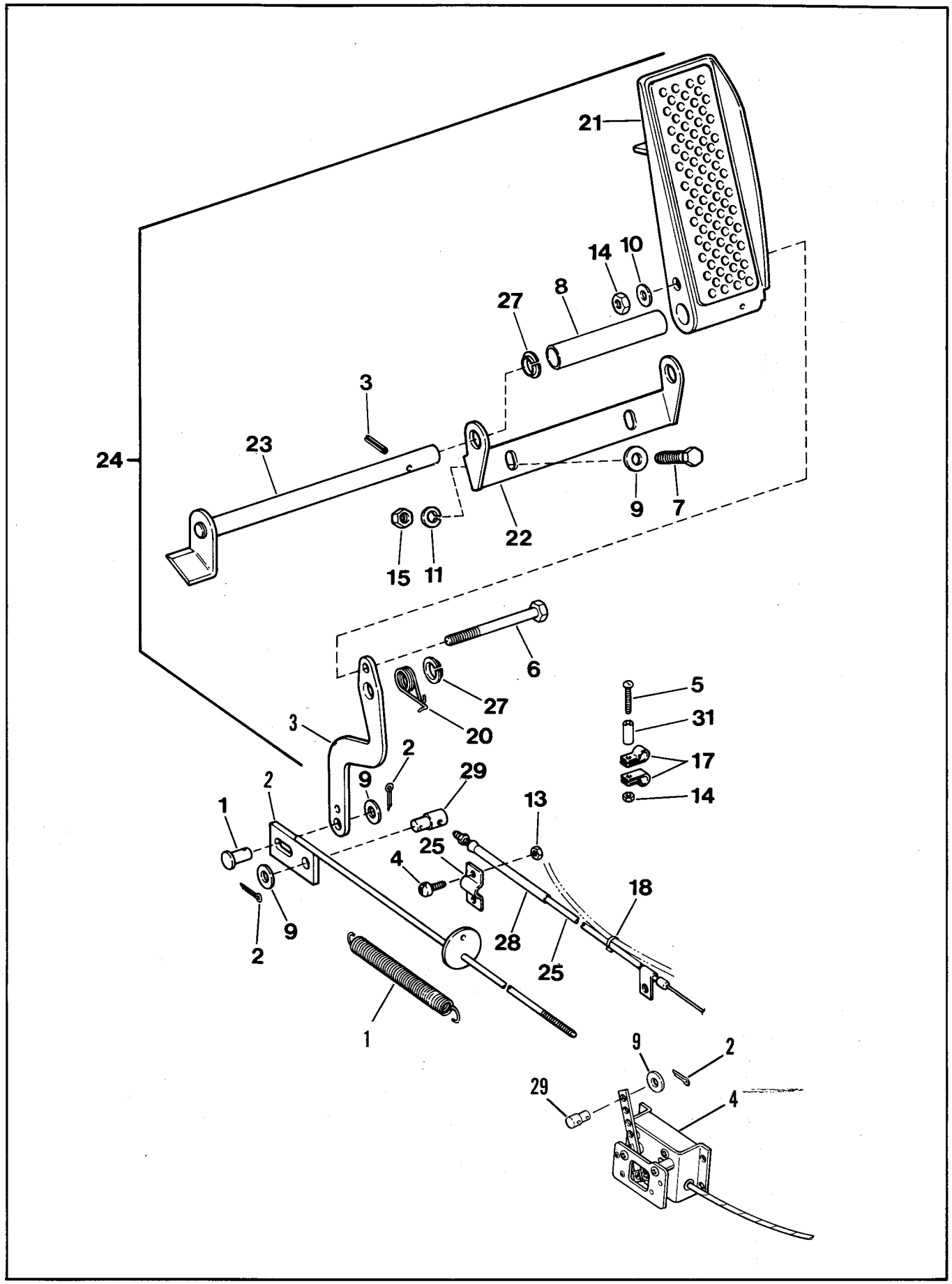
21
14
10
8
27
3
23
24
9
7
22
15
11
6
5
31
27
20
17
3
2
14
2
9
29
1
13
25
4
18
9
28
2
25
1
9
2
29
4

Figure 67

Removal (Figure 68)

a. Raise the vehicle body.

WARNING

ParCar with angle bag rack – to secure body upright and avoid possible personal injury through accidental closing of body, remove body hold-up rod from clip and insert into slot in body frame.

WARNING

Disconnect battery cables (negative cable first) to avoid accidental start up of vehicle and possible persoinal injury.

WARNING

Gasoline is extremely flammable and highly explosive. Do not smoke of allow open flame or sparks anywhere in the area when refueling or servicing the fuel system.

b. Loosen air cleaner clamp and pull air cleaner hose free of carburetor.

c. Disconnect fuel line, choke cable, throttle cable and governor cable.

d. Remove the carburetor attaching nuts and lockwashers and pull carburetor out.

e. Disconnect fuel pump hose from the carburetor body.

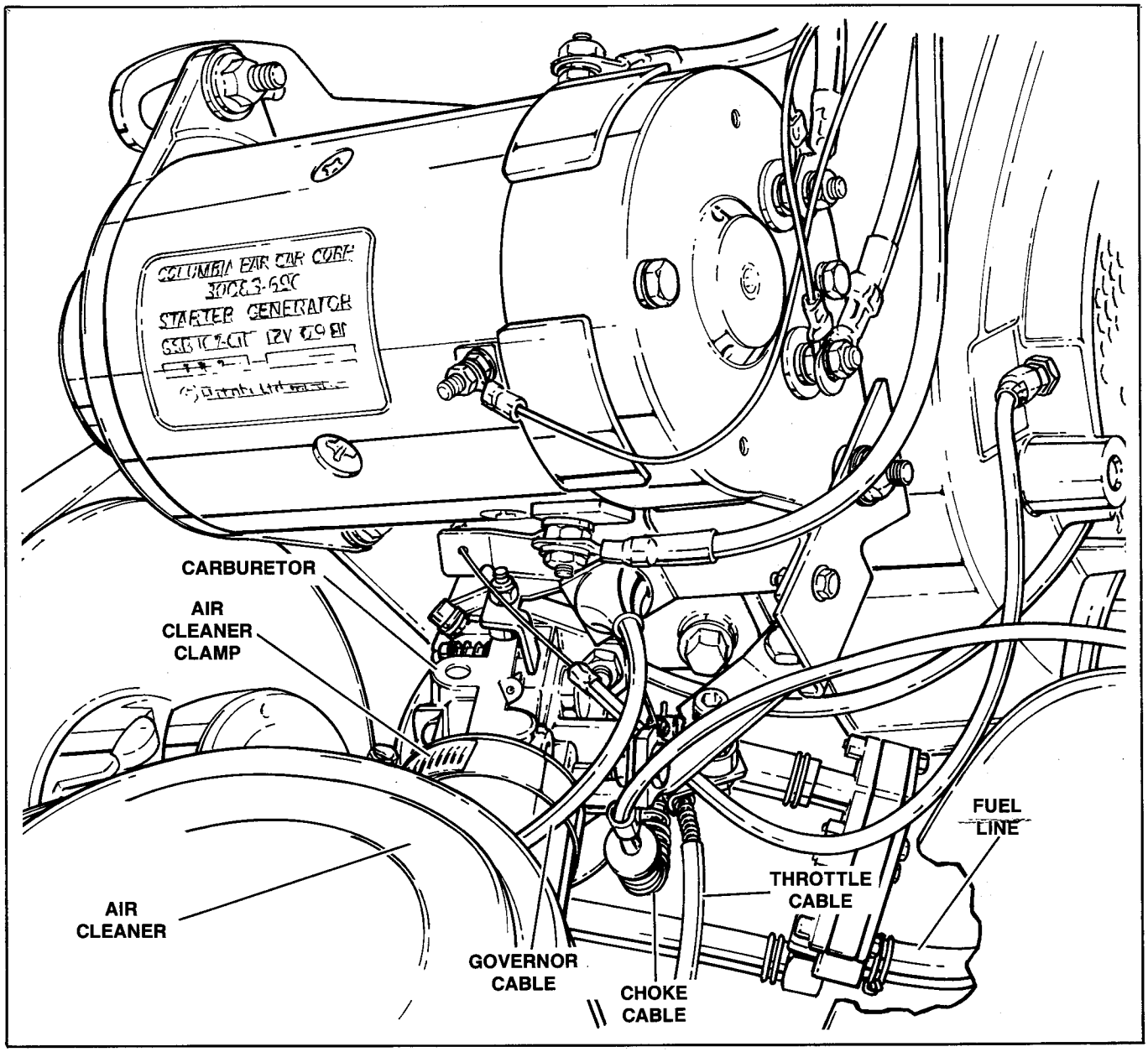

Figure 68 – Carburetor Removal

Disassembly

FLOAT CHAMBER (Figure 69)

a. Remove bowl retainer plug (14), gasket (2), float bowl (3) and float bowl gasket (15).

b. Remove float shaft (8), float (9) and float valve/inlet needle (10).

c. Remove main jet nozzle (27) (if required).

CARBURETOR BODY (Figure 69)

NOTE: Note the spring positions of the throttle shaft. This is important for reassembly.

a. Remove throttle disc screws (17) and disc (7), and pull throttle shaft assembly (5), dust seal (28) and spring (24) out of carburetor.

b. Remove throttle stop (20) and spring (23).

c. Remove the choke disc screws (13) and disc (18), and pull the choke shaft assembly (6) out of the carburetor body.

d. Remove idle adjustment needle (25) and spring (21).

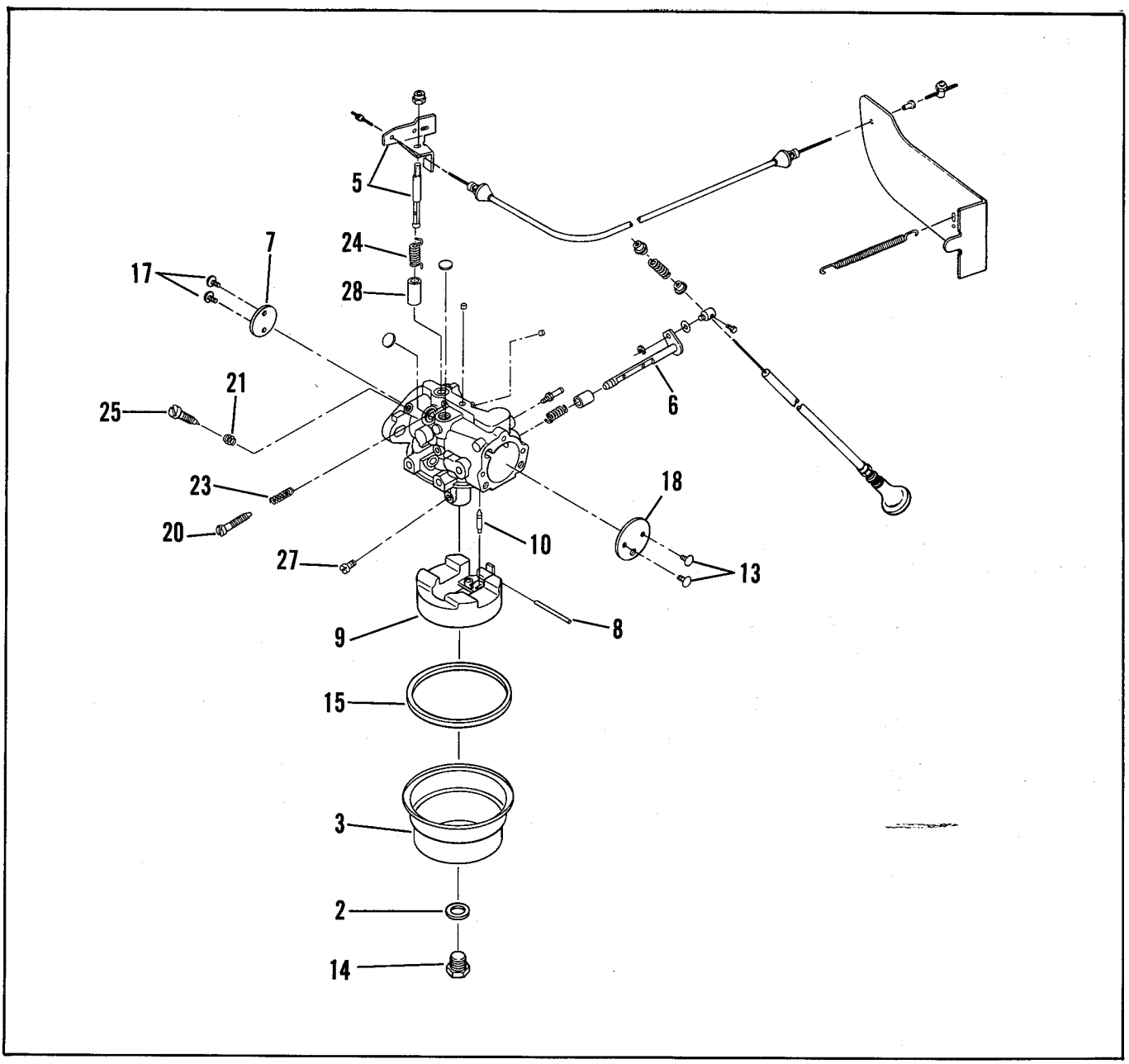

Figure 69 – Carburetor

FUEL PUMP (Figure 70)

NOTE: To ensure against fuel pump leaks, install new gaskets if fuel pump is disassembled.

a. Remove the fuel pump screws (1) and cover (2).

b. Separate the pumping chamber (5) from the impulse chamber (9).

c. Separate the gasket (4) and diaphragm (3) from the pumping chamber housing.

d. Separate the gasket (7), diaphragm check valve (6) and springs (8) from the impulse chamber (9).

CARBURETOR BODY

a. Clean the carburetor body in a carburetor cleaning solvent to remove varnish and carbon from the fuel and air passages.

b. Blow with dry compressed air. Reverse the air flow through all passages to remove all dirt particles.

CAUTION

Never scrape carbon deposits from the carburetor using steel instruments. Do not use wire or drills to clean passages. Any one of these things can change the size of the passage holes or alter the carburetor. Do not use carburetor cleaner on rubber or plastic parts.

Cleaning

FLOAT CHAMBER

a. Blow any dirt from float valve passage.

b. Clean all dirt from float valve seat.

c. Replace float if it is cracked or damaged.

FUEL PUMP

a. Clean fuel pump chamber with carburetor cleaning solvent.

b. Blow any dirt out of fuel pump using compressed air.

c. Replace fuel pump gaskets and diaphragms.

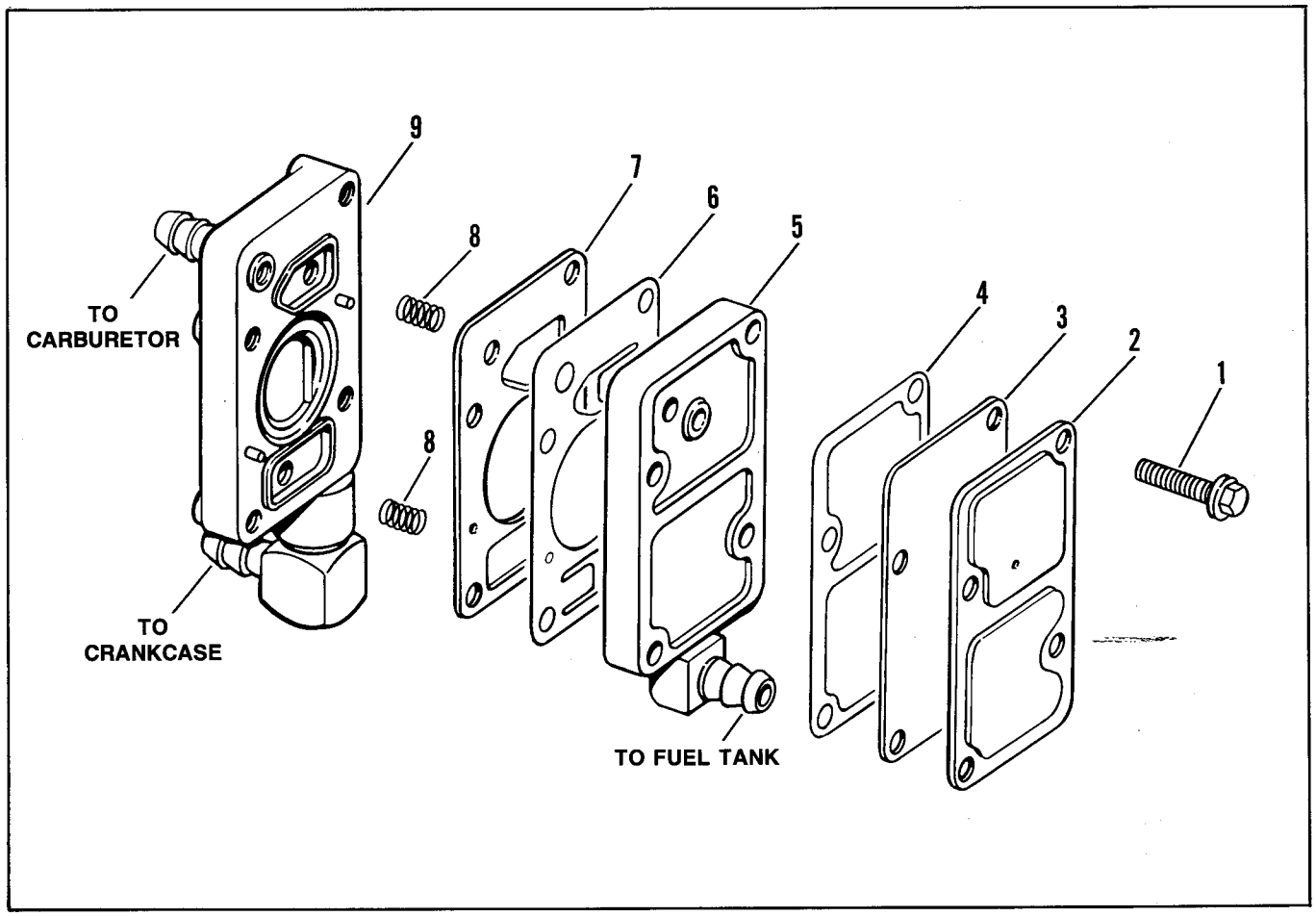

Figure 70 – Fuel Pump

Assembly

CARBURETOR BODY (Figure 69)

a. Install spring (24), dust seal (28) and throttle shaft assembly (5) into carburetor body and position throttle disc (3).

b. Apply 609 Loctite® (or equivalent) to throttle valve screws (17) and tighten to 5-6 in.-lbs. torque.

c. Install swivel assembly (12). Tighten to 5-6 in.-lbs. torque.

d. Install choke shaft assembly (6) into carburetor body and position choke valve disc (8).

e. Apply 609 Loctite® (or equivalent) to choke screw (3) and tighten to 5-6 in.-lbs. torque.

f. Install idle adjustment needle (25) and spring (21).

g. Install throttle stop screw (20) and spring (23).

FLOAT CHAMBER (Figure 69)

NOTE: This float valve and seat is carefully matched, should any parts be damaged or show signs of wear, a complete new float valve, gasket and seat should be installed.

a. Install jet (27) (if removed) and tighten to 6-8 in.-lbs. torque.

b. Install float (7), valve (9) and float shaft (8).

NOTE: At this time, check the float level adjustment.

c. Install gasket (15), float bowl (3), gasket (2) and bowl retainer screw (14).

FUEL PUMP (Figure 70)

NOTE: Fuel pump repair kit will be required before reassembling the fuel pump.

a. Install new valve springs (8), gasket (7) and diaphragm (6).

b. Press impulse chamber (9) to pumping chamber (5) and install pumping chamber gasket (4) and diaphragm (3).

c. Install cover (2) and screws (1). Tighten cover screws to 18-22 in.-lbs. torque.

Installation

Install carburetor to manifold studs and fasten using nuts. Tighten carburetor nuts to 8-10 ft.-lbs. torque.

a. Connect fuel line at fuel pump.

b. Connect throttle cable, choke cable and governor cable.

c. Check throttle control link adjustment.

d. Check choke operation.

e. Connect air cleaner hose and tighten clamp.

f. Check for leaks.

g. Connect battery cables, lower body and test drive.

Carburetor Troubleshooting

IMPORTANT: Before suspecting the fuel system and carburetor for poor engine performance, make sure the ignition system is in proper operating condition by checking the following items.

a. Spark plug cap condition.

b. Module condition and wires.

c. Ignition circuit wiring including engine ground strap and switches.

d. Check coil and condenser condition and connections.

e. Check the ignition timing.

f. Air cleaner element.

g. Check the fuel mixture. An over-rich fuel/air mixture will cause excessive smoking, loss of power, engine roughness or flooding. An over-lean condition will cause hard starting or surging speed.

h. Check fuel pump connections to carburetor and intake manifold.

i. Make sure the exhaust is not restricted.

SYMPTOM	CAUSE	REMEDY
Hard starting.	Improper idle adjustment.	Adjust idle.
	No fuel in carburetor.	Check fuel level, fuel filter, fuel pump and check for clogged fuel line.
	Choke not closing properly.	Check choke control for proper travel.
	Inlet needle stuck.	Remove, disassemble and clean carburetor.
	Broken or improperly seated reed leafs.	Replace or reseat.
Engine runs rich.	Improper idle speed adjustment.	Adjust idle.
	Float level set too high.	Adjust float level.
	Inlet needle stuck.	Remove, disassemble and clean carburetor.
	Float bowl gasket leaks.	Remove and replace gasket.
	Air bleeds in carburetor plugged.	Remove, disassemble and clean carburetor.
	Choke not open.	Inspect lever and linkage to insure proper opening.
Engine runs lean.	Improper idle speed adjustment.	Adjust idle.
	Idle holes plugged and dirt in fuel delivery channels.	Remove, disassemble and clean carburetor.
	Float level set too low.	Adjust float level.
	In-tank fuel strainer plugged.	Remove from tank and clean or replace.
Fuel leaks from carburetor.	Float level set too high.	Adjust float level.
	Carburetor gummed from storage or bad fuel.	Remove fuel bowl and clean.

30. REED VALVE

The reed valve is a one way valve consisting of a leaf spring with 8 petals over 8 holes in a plate. The petals open to allow the fuel mixture to enter the engine crankcase on piston upstroke and close on piston downstroke to prevent fuel blowback from the crankcase to the carburetor. The reed valve requires little maintenance, however, if one or more of the petals should become bent or broken, the valve leaf must be replaced.

Hard starting, poor performance, or fuel soaked air cleaners can be caused by broken reed leafs or reed leafs which are not seated properly due to rough or irregular reed plates.

It is important that the reed valve assembly be in proper working condition. Its function is to trap the combustible fuel-air mixture during the downstroke of the piston so that it can be forced through the transfer ports into the combustion chamber. If the leaf is inadequately seated or broken, a reduced amount of fuel and air is transferred into the combustion chamber resulting in lost torque and horsepower.

Removal

a. Remove carburetor, Paragraph 29, this section, and intake manifold assembly.

b. Remove the reed valve assembly.

Disassembly (Figure 71)

To disassemble the reed valve assembly, remove the nut (4), lockwasher (5), stop (7) and leaf (8).

Cleaning, Inspection and Repair (Figure 71)

a. All leaf petals (8) must be intact and fully seated against the base plate. If petals are bent, replace the leaf.

b. Remove all burrs from plate (9) with a fine emery cloth. Be sure to remove all metal shavings before reassembly.

c. Check gasket to make sure pulse passage is not blocked.

Assembly (Figure 71)

a. Position leaf (8) on side of plate with index hole used for positioning the leaf petals. Align the leaf so the hole is in between the petals.

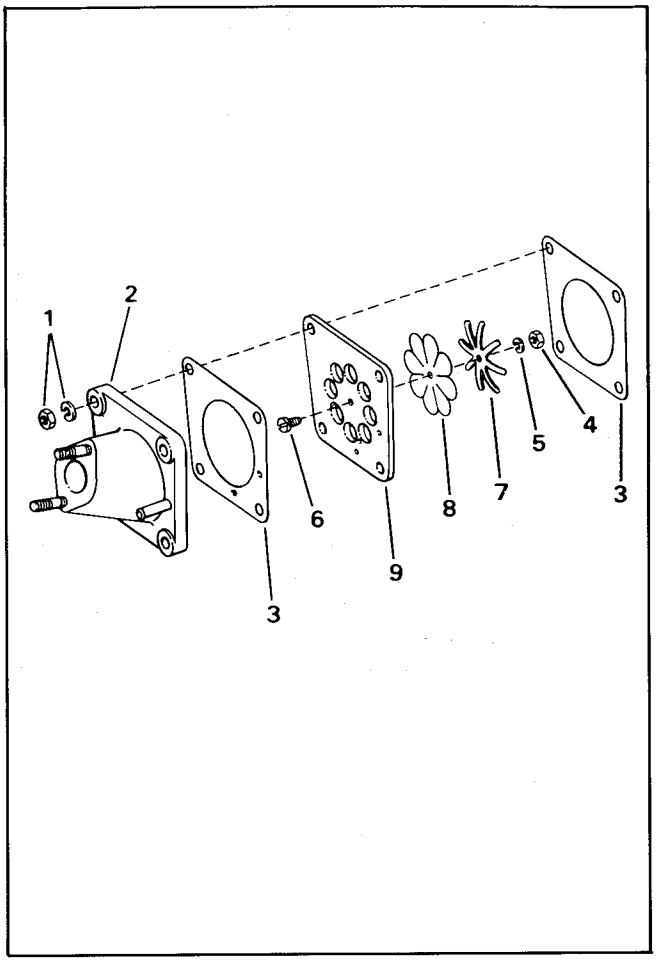

Figure 71 – Reed Valve and Manifold

b. Center the reed stop (7) over the leaf petals. Make sure there is no gap between the plate and leaf. The leaf must lie flat on the plate.

c. Apply a small amount of 609 Loctite® (or equivalent) to the screw (6) threads. Install the lockwashers (5) and nut (4). Tighten the nut to 25-30 in.-lbs. (635-762 kgm) torque.

Installation

a. Install the reed valve and gaskets (3) with the leaf stop facing into the crankcase.

b. Install the carburetor/manifold assembly and air cleaner hose.

31. AIR CLEANER

Air cleaner should be serviced at least every month – more frequent service may be necessary under extremely dirty operating conditions.

Need for immediate servicing will be indicated by loss of power, sluggish acceleration, or excessive exhaust smoke. These are also indications of a dirty exhaust system.

Disassembly (Figure 72)

a. Unscrew wing nut (1) and remove washer (2) at top of filter can and separate canister.

b. Clean element (3) by tapping the side or end gently against palm of the hand.

CAUTION

Do not tap element against a hard surface because the element may be damaged by doing so.

Cleaning can also be done with compressed air (35 psi - 2.4 atm) from inside out.

c. Inspect element by holding light inside element. An even, fine pattern of light through element indicates element is clean. Any large spot of light indicated that element is damaged and should be replaced. Also if light does not show through, it indicates that pores are blocked and element should be replaced.

d. Check condition of sealing surface at the end of the element - if damaged, replace element. Check condition of rubber onloader valve. Opening in slit should be uniformly wide - not deformed, and must be free of any obstruction.

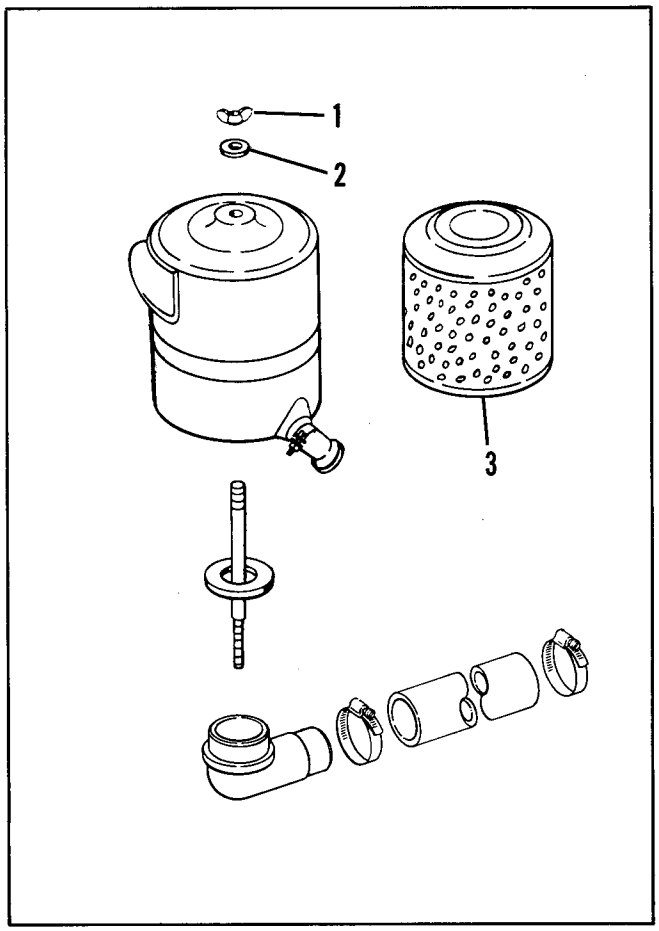

Figure 72 - Air Cleaner

CAUTION

If the air cleaner element is short, the canister cover will contact before the element can seal, leaving space on top for dirt to pass over element and enter engine. This will damage the engine and void the warranty.

e. Clean bottom of canister and reinstall element. Position filter housing with unloader valve pointing to back of vehicle.

f. Install hardware in reverse order.

32. FUEL TANK (Figure 73)

The fuel tank is made of a high density polyethylene material. If vehicle is not to be run for a lengthy period of time, such as extend-off-season storage, stabilizer should be added to the fuel mixture following the manufacturer's recommendations on the container.

A cartridge type fuel filter is located in the fuel supply line to the carburetor. If there is an indication of restricted fuel flow at the carburetor, filter should be replaced and fuel strainer screen should be cleaned.

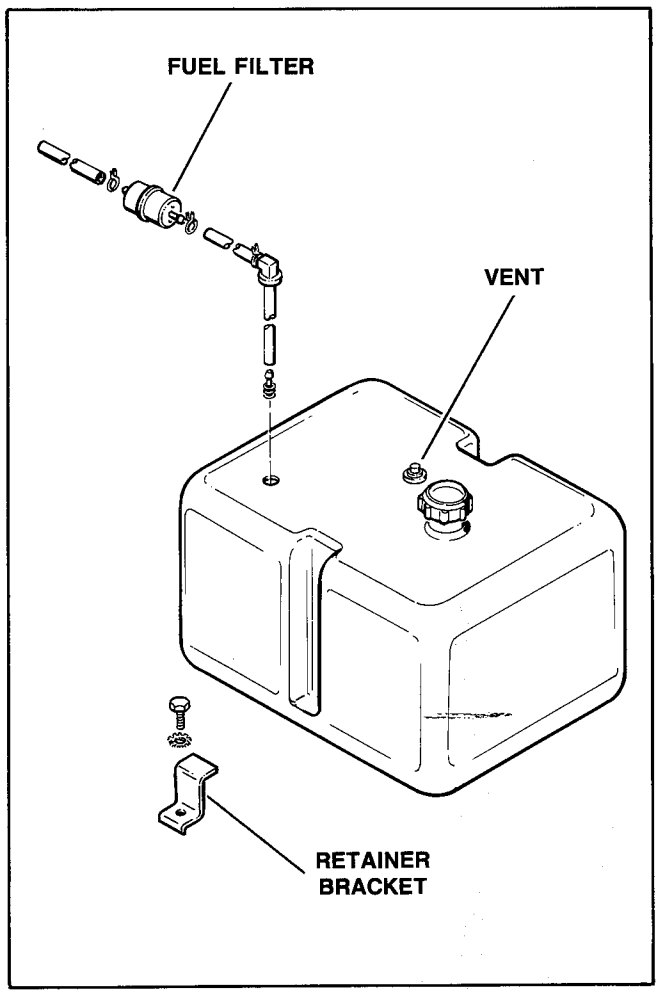

Figure 73 - Fuel Tank

Removal

a. To remove the fuel tank, disconnect the fuel line.

b. Remove the mounting hardware and lift the tank up off the frame.

c. Install in reverse order.

WARNING

Gasoline is extremely flammable and highly explosive under certain conditions. Do not smoke or allow open flame or sparks anywhere in the area when refueling or servicing the fuel system.

33. OIL INJECTION PUMP (Figure 74)

The oil injection lubrication system is factory installed. The system consists of an oil reservoir, crankshaft driven oil pump mounted on the timer compartment, clear plastic feed and delivery lines, a throttle operated control cable and a filter. The filter on early models is a strainer type located in the filler neck of the oil tank. The filter is in the oil line running to the intake manifold. This late model in line filter can be installed on early models.

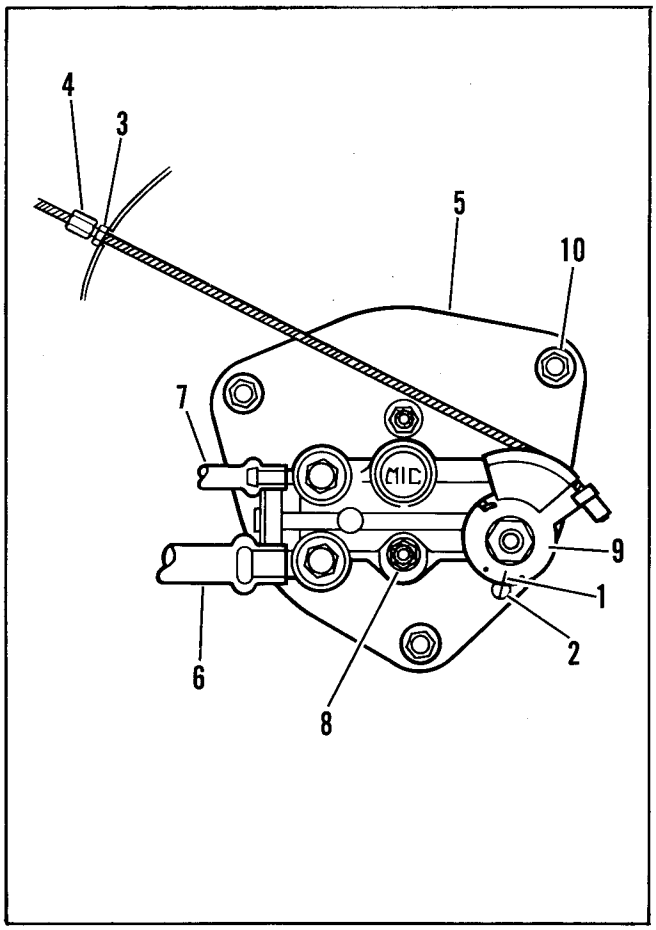

Figure 74 – Oil Injection Pump

Lubricating oil is fed into the intake manifold. Feed is controlled by a cable running from the carburetor throttle lever to the oil pump control lever to vary the oil output as required by varying vehicle loads and speeds.

Removal

a. Remove fan screen from crankcase.

b. Release cable end from pump control lever (9) and remove cable.

c. Remove timer plate mounting screws (10).

d. Pump and timer plate (5) can now be separated from engine as an assembly.

e. Remove feed line (6) and delivery line (7) from pump.

f. Remove pump mounting bolts (8) to separate pump from timer cover plate.

Installation

a. Install pump to timer cover plate with screws and nuts (8). Tighten screws (8) evenly to 35-40 in.-lbs.

CAUTION

Screws (8) must be tightened alternately in 10 in.-lb. increments to prevent cocking of pump which could cause pump damage.

b. Install feed line (6) and delivery line (7) to pump.

c. Position oil pump drive tang to engage slot in crankshaft end and install pump and timer plate assembly to engine with screws (10).

d. Install cable end to pump control lever (9) and secure cable.

e. Check pump adjustment.

f. Install fan screen.

Adjustment

a. Remove fan screen.

b. Adjustment is made with a static setting vehicle not running.

c. With vehicle not running, reference mark on control lever (1) must align with reference mark scribed on pump boss. (2)

d. Adjustment can be made by loosening locknut (3) on the cable running through the crankcase and turning adjusting sleeve (4) until marks align.

e. With adjustment corrected, tighten locknut (3).

f. Install fan screen in reverse order.

Bleeding Oil Injection Lines

If the oil lines contain air bubbles, the bubbles must be removed. First make certain oil tank is filled above half full. To clear air in the large diameter feed line between the tank and pump, a pump bleed screw has been provided. The bleed screw is located directly above the control lever facing upward. The bleed screw has an 8 mm hex and also a screwdriver slot. Open, unscrew, the bleed screw two (2) complete turns. Do not remove screw completely. This will expose a bleed hole in the side of the screw and allow air to escape. Catch discharged oil with a rag or small container. Close screw when all air has been removed.

If air is present in the small diameter delivery line between pump and intake manifold it will be necessary to first drain the fuel tank and carburetor and refill with approximately 1/2 gallon of 85:1 premixed fuel and 2-cycle oil.

Operate engine as long as necessary on premixed fuel for the air bubbles to be purged from the line. After all air has been removed from the line, refill tank with straight gasoline.

Ignition Timer Wire Routing

Mounting of the oil injection pump on the special timer cover provides little clearance for termination of the module wires. If the rubber insulator is not insulated properly, clearance does not exist, the wires may short out against the cover resulting in either intermittent ignition or no ignition at all. To prevent this condition we have routed the wires as follows: The module wires are bent at a 90° angle as it leaves the module behind the plate and routed through shrink tubing harness through the fan housing.

SECTION 9
TRANSMISSION

34. DRIVE BELT

The transmission automatically changes the driving ration by altering the diameter of the primary and secondary flanges on which the drive belt runs. When the throttle is opened and the engine speed increases, the primary drive floating flange moves toward the fixed flange by the force of weights operating on ramps in the primary floating flange. When the trottle is closed, the engine slows down, reducing the force on the weights and the primary spring separates the flanges. As the engine speed increases the driving ratio changes. See Figure 75. The increased speed causes the drive belt to ride higher up on the flanges on the primary drive decreasing the driving ratio.

WARNING

Block vehicle wheels when working on drive to prevent drive components from rotating during servicing.

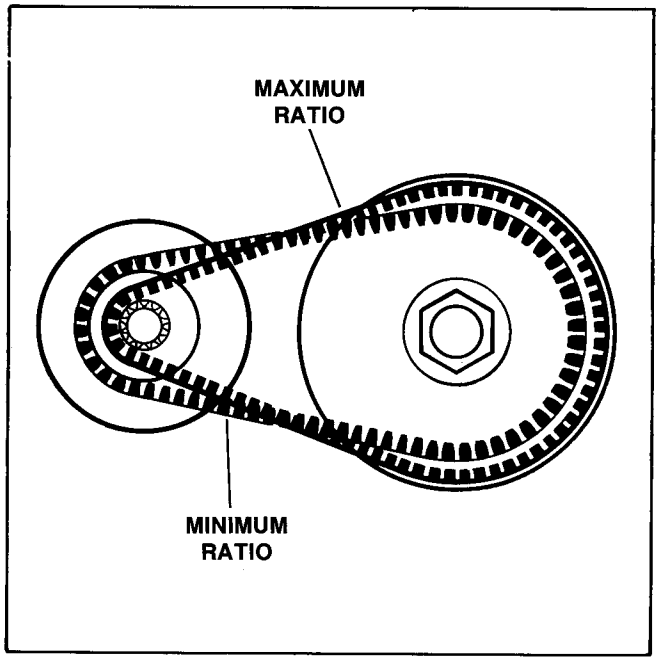

Figure 75 – Transmission Ratio

The secondary drive flanges are spring loaded and correspondingly separate and close according to the amount of belt pull. When the primary drive flanges are apart in the idle position, the secondary flanges are held in the closed position by spring force applied against the secondary floating flange. As the primary drive flanges assume a larger driving diameter, the drive belt is pulled down moving the secondary flanges apart until the minimum ratio is achieved.

The transmission is torque responsive. When ascending a hill or opening the throttle suddenly, the primary flanges come together, increasing the useful diameter of the pulley and creating a lower overall drive gear ratio.

WARNING

ParCar with angle bag rack – to secure body upright and avoid possible personal injury through accidental closing of body, remove body hold-up rod from clip and insert into slot in body frame.

WARNING

Disconnect battery cables (negative cable first) to avoid accidental start up of vehicle and possible personal injury.

The belt should be cleaned with nonflammable cleaning solvent when it becomes greasy and dirty.

The belt is approximately 1-3/16 in. wide. After belt has worn 1/16 in. at widest point, the belt should be replaced.

Removal

IMPORTANT: When installing a drive belt, install it on the primary first – secondary last.

IMPORTANT: When removing a drive belt, remove it from the secondary first – primary last.

a. Grasp the drive belt midway between the primary and secondary drives, lift upward on the belt and roll off the secondary drive.

b. Pull governor arm back and remove belt from primary.

Installation

NOTE: After installing the drive belt, make sure the governor wire is properly installed.

Install the new belt by placing it on the primary first and then rolling it on the secondary.

35. PRIMARY DRIVE

Disassembly

a. Raise the vehicle body.

WARNING

ParCar with angle bag rack - to secure body upright and avoid possible personal injury through accidental closing of body, remove body hold-up rod from clip and insert into slot in body frame.

WARNING

Disconnect the battery cables (negative cable first) to avoid accidental start up of vehicle and possible personal injury.

b. Remove the drive belt, Paragraph 34, this section.

c. Remove the governor arm assembly.

d. Loosen the starter-generator mounting hardware and remove the starter-generator belt.

e. See Figure 76. Remove primary drive cover screws (2), pull cover (1) off.

f. See Figure 77. Remove the bolt (1), washer (2) and lockwasher (3) from the floating flange (4).

NOTE: The primary can be held from rotating by fabricating the tool, Figure 77A. To hold the primary, insert the two 5/16 inch bolts into any two adjoining slots in the primary cover.

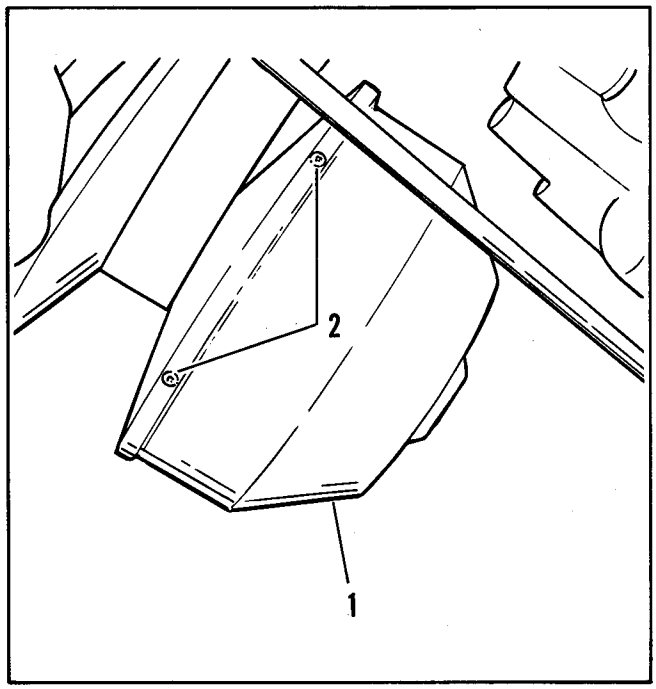

Figure 76 - Primary Drive Cover

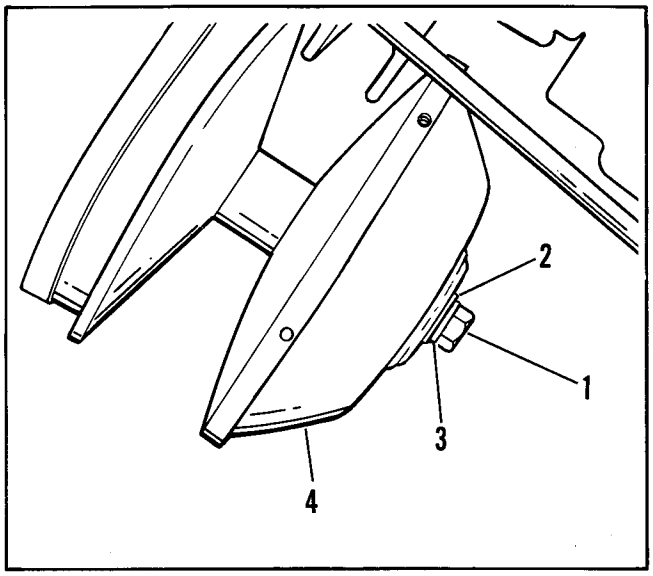

Figure 77 - Removing Movable Flange Cover

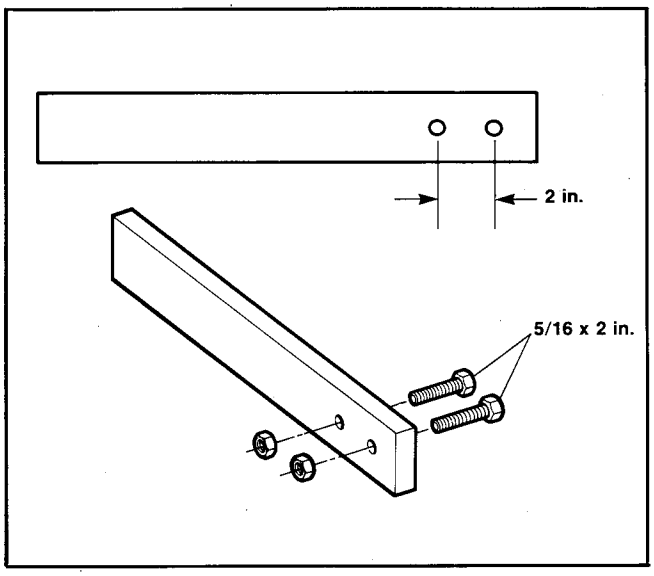

Figure 77A - Primary Tool

g. See Figure 78. Remove complete primary assembly (using Tool Kit No. 209422C) by inserting pin and bolt into primary shaft and tighten bolt. As the bolt is tightened, the complete primary assembly will come free of the crankshaft. While supporting the primary in your hand, back bolt out of primary shaft and tap the bolt with a hammer to remove the inner cover.

WARNING

Use of a hammer may damage floating flange face (belt side) and affect transmission operation. Never pry or beat on the cover.

NOTE: The flange weights are equally spaced, and must be installed as originally removed, with semi-circular notch of pucks facing outward.

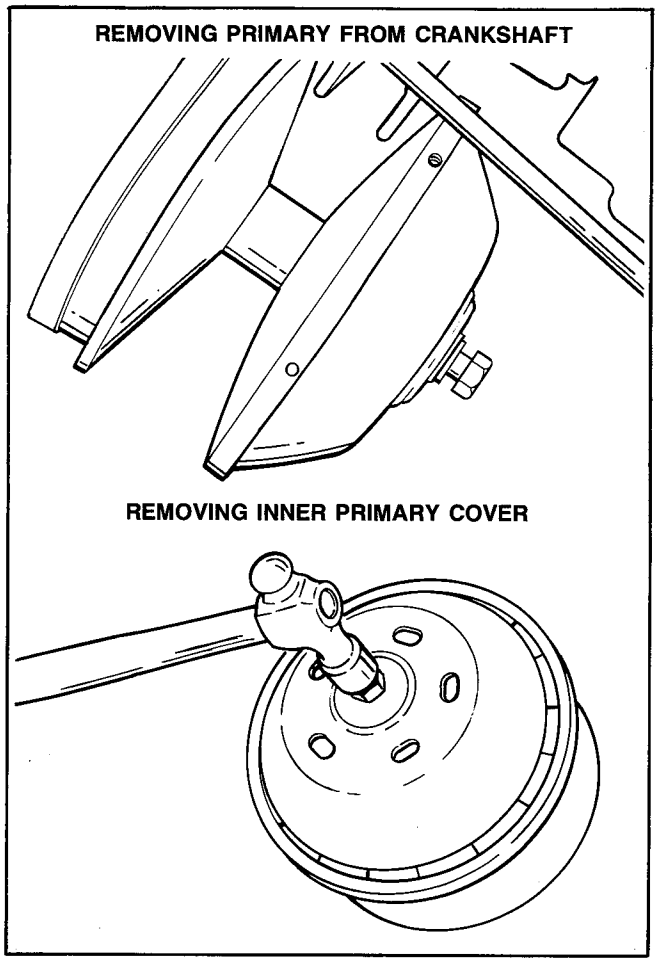

Figure 78 – Removing Primary Drive Floating Flange and Drive Cover

h. Separate the floating flange (1), spring (2) and fixed flange (3), Figure 79.

i. Remove the pucks (4), Figure 79.

Cleaning and Inspection

a. Clean all parts in a nonflammable cleaning solvent and blow dry with compressed air.

b. Check for wear at flange surfaces where drive belt makes contact. A wear surface of 1/32 in. or more in either flange is usually enough to affect vehicle operation of the transmission. Replace the flanges if worn 1/32 in. or more.

Assembly

a. See Figure 79. Install spring (2), floating flange (1) and weights (4) to fixed flange (3) on a flat surface.

NOTE: The weights must be equally spaced in the floating flange guides.

b. See Figure 79. Install cover (6) by lining up the "D" slot in the cover with the slot of the stem while pressing on the cover to compress the spring (2) until cover (6) contacts the stem. Lightly tap cover onto stem until stem is flush with top of cover.

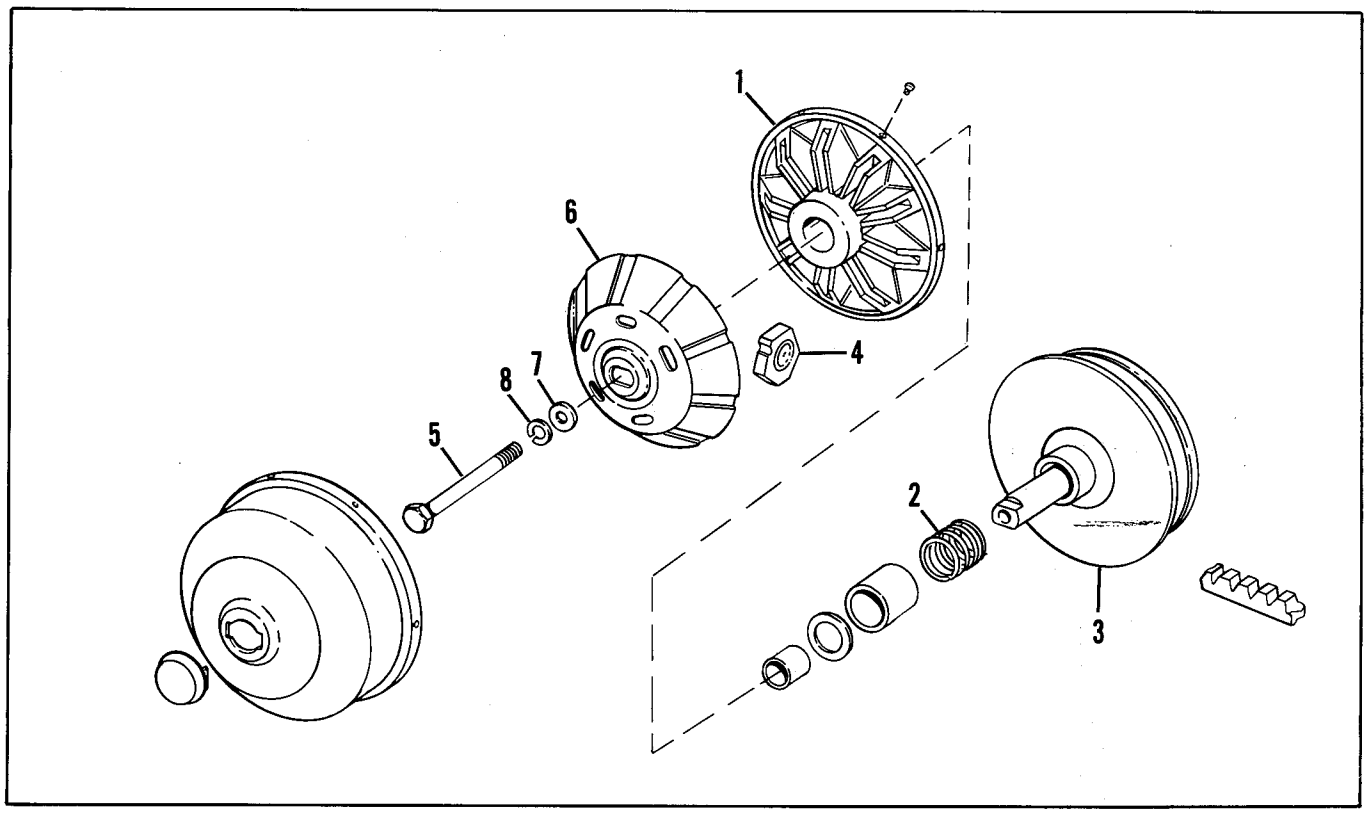

Figure 79 – Primary Drive

c. Install washer (7), lockwasher (8) and bolt (9) into stem. Install primary onto crankshaft taper and thread bolt (9) by hand. Hold primary as described in NOTE under Step f of Disassembly and tighten bolt (9) to 38-48 ft.-lbs. torque.

d. See Figure 76. Install cover (1), screws (2) and plug (3).

e. Install starter-generator belt.

f. Install the drive belt per Paragraph 34, this section.

g. Install the governor arm assembly.

h. Connect battery cables and lower the body.

i. Check for proper operation.

36. SECONDARY DRIVE

Disassembly (Figure 80)

a. Raise the vehicle body.

WARNING

ParCar with angle bag rack – to secure body upright and avoid possible personal injury through accidental closing of body, remove body hold-up rod from clip and insert into slot in body frame.

WARNING

Disconnect battery cables (negative cable first) to avoid accidental start up of vehicle and possible personal injury.

b. Remove the drive belt per Paragraph 34, this section.

c. Apply the parking brake and loosen drive hub nuts (2) and center bolt (5).

d. Release the parking brake.

e. Remove the four nuts (2), lockwashers (3) and remove the secondary drive and brake disc from the differential flange.

f. Remove the bolt (5), washer (7) and lockwasher (6) from the hub (4) and remove hub.

g. Using the brake disc as a tool, apply force to cam (10) and compress spring (11). Remove retaining ring (8), washer (9), cam (10), spring (11), key (13) and separate movable face (15) and fixed face (12).

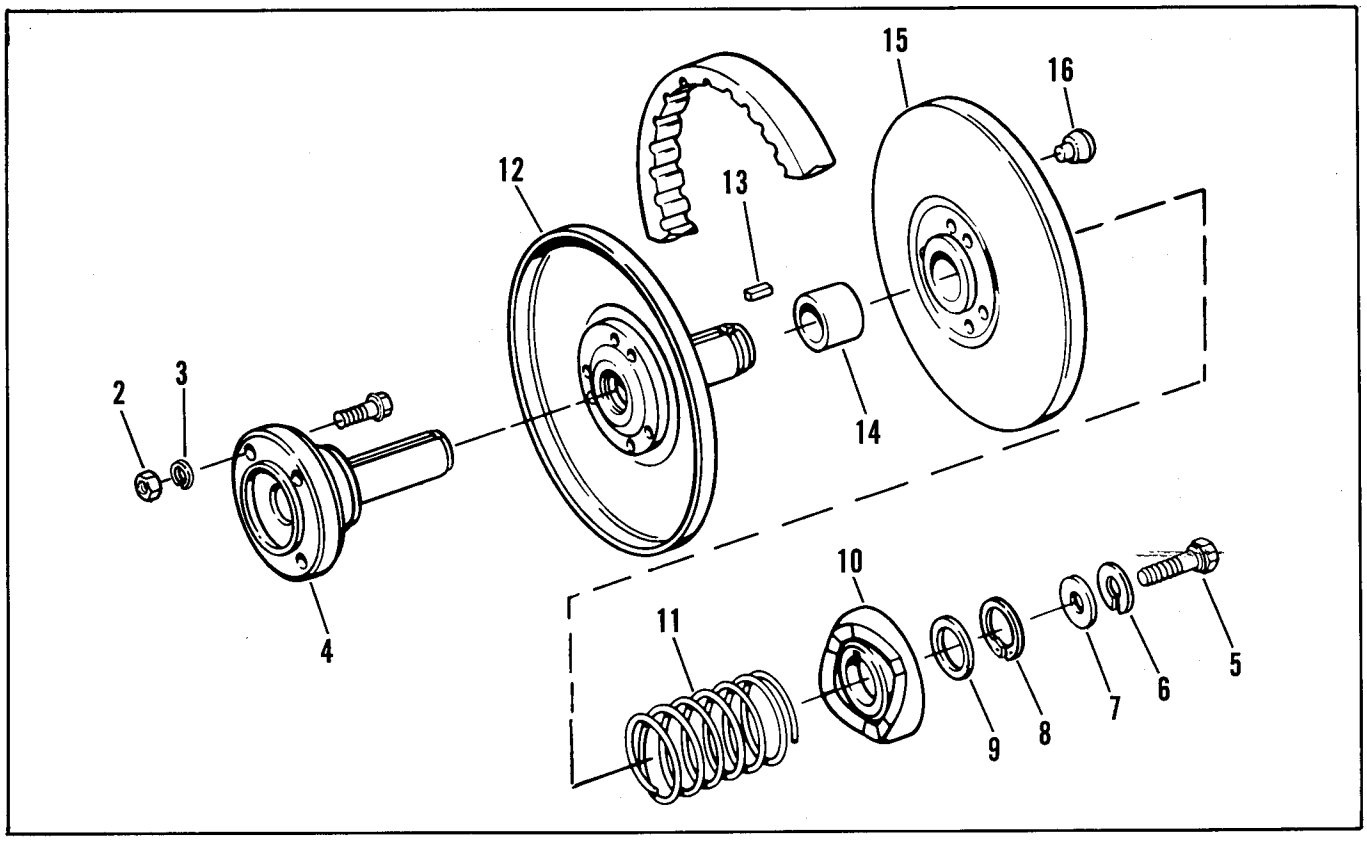

Figure 80 – Secondary Drive Assembly

Cleaning, Inspection and Repair

a. Clean all parts in a nonflammable cleaning solvent and blow dry with compressed air.

b. Check for wear at flange surfaces where drive belt makes contact. A wear surface of 1/32 in. or more in either flange is usually enough to affect vehicle operation of the transmission. Replace the flanges if worn 1/32 in. or more.

Bushing Removal

Press out bushing (14) being careful not to score bore. Clean with a nonflammable solvent.

IMPORTANT: When installing new bushing, submerge moveable flange (15) in 30 wt. oil and press new bushing in while bore is still submerged. This will fill reservoir cavity behind bushing.

Assembly (Figure 80)

a. Assemble the fixed face (12), and movable face (15) with bushing (14) and buttons (16).

b. Install key (13) into fixed face keyway and install spring (11) and cam (10).

c. Line up keyway in cam with key in flange post, with cam ramps centered between buttons on moveabel face. Apply downward pressure on cam (10) compressing spring (11) and sliding cam (10) onto fixed face post (12).

d. When ring groove at end is well exposed, install washer (9), and retaining ring (8) into groove completely.

e. Line up keyways and slide drive hub (4) into secondary drive assembly.

f. Install bolt (5), washer (7) and lockwasher (6) into hub end.

g. Install hub with drive and brake disc to differential flange.

h. Install bolts (1), lockwashers (3) and nuts (2) and tighten.

i. Apply parking brake and tighten bolt (5) to 25-30 ft.-lbs. torque.

j. Install drive belt by rolling it onto the secondary drive flange.

k. Connect battery cables and lower body.

l. Check for proper operation of secondary drive.

m. Adjust brake per Paragraph 18, SECTION 5.

SECTION 10
ELECTRICAL

SPECIFICATIONS – P4G, G4S, GU4

STARTER-GENERATOR

Model ..... Hitachi
Type ..... Series wound, reversible
Rating ..... 12 Volts
Output ..... 0.9 HP (30 Sec.) Starter 14 Volts
11 Amps Cont. generator at ..... 5000 RPM
Cut in Speed ..... Under 3000 RPM @ 14 Volts
Brushes –
  Original length ..... 7/8 in. (22.225 mm)
  Minimum length ..... 5/8 in. (15.875 mm)
Brush spring tension ..... 28 ± 4 oz. (680.4 grams)
Commutator –
  Original diameter ..... 1.614 in. (41 mm)
  Minimum diameter ..... 1.535 in. (39 mm)
  Under cut depth ..... .025 in. (.63 mm)
  Runout after finishing ..... .002 in. max.
Pulley ..... 2.62 in. dia.

IGNITION SYSTEM

Module ..... Solid State Ignition
Spark plug –
  Type ..... Champion®
  Size ..... 14 mm × 1/2 in.
  Gap ..... .025 in. (.6 mm)

TORQUES

Spark plug ..... 15-20 ft.-lbs. (2.074-2.765 kgm)
Battery terminals ..... 60-120 in.-lbs.
Starter-generator mounting bolts ..... 12 ft.-lbs. (1.659 kgm)
Pulley nut ..... 26-33 ft.-lbs. (3.59-4.56 kgm)
Pole shoe screws ..... 108 in.-lbs.

ELECTRIC ParCar – P4E & E4S
ELECTRIC Utilitruck – EU4

MOTOR

Type ..... Series wound, reversible
Rating ..... 2 HP @ 2800 RPM, 36 volts

DRIVE

Direct Drive Motor to Differential Shaft
Drive Ratio 12.25

BATTERIES

Type ..... 6 volt electric vehicle (EV) lead storage battery
Quantity ..... 6 per car
Rating ..... 106 minutes (75 amp discharge at 80°F to 5.25 volts)
Charge rate ..... (total for 6 batteries in series) Maximum; 25 amperes with automatic charger reduction to low rate

37. DIRECTIONAL KEY SWITCH

Removal

a. Raise the vehicle body.

WARNING

ParCar with angle bag rack – to secure body upright and avoid possible personal injury through accidental closing of body, remove body hold-up rod from clip and insert into slot in body frame.

WARNING

Disconnect the battery cables (negative cable first) to prevent accidental start up of vehicle and possible personal injury.

NOTE: The directional key switch is not repairable. If the switch becomes defective, it must be replaced.

b. Remove drink cups and disconnect key switch harness inside cowl.

c. Remove spanner nut on face of dash.

d. Remove switch by reaching into drink holder holes and pulling through dash to remove.

TESTING DIRECTIONAL KEY SWITCH FOR CONTINUITY

Use a continuity tester to test directional key switch. If switch is good, the light will glow. Check continuity between the B and A terminals with directional key switch in forward. Now switch directional key switch to reverse and check continuity between the G and H terminals. If continuity test light does not glow, switch is defective and must be replaced.

Installation (Figure 81)

a. When wiring key switch, with plastic connector, connect switch wires as follows:
   - B to 1 H to 5
   - A to 4 E to 6
   - G to 3

b. Install switch in reverse order.

Wiring Harness

a. The wire harness, Part No. 70019-89-A, is wired directly to the key switch with no connector.

b. Color codes for wiring switch are shown in Figure 82.

c. Testing is done the same as key switch with connector.

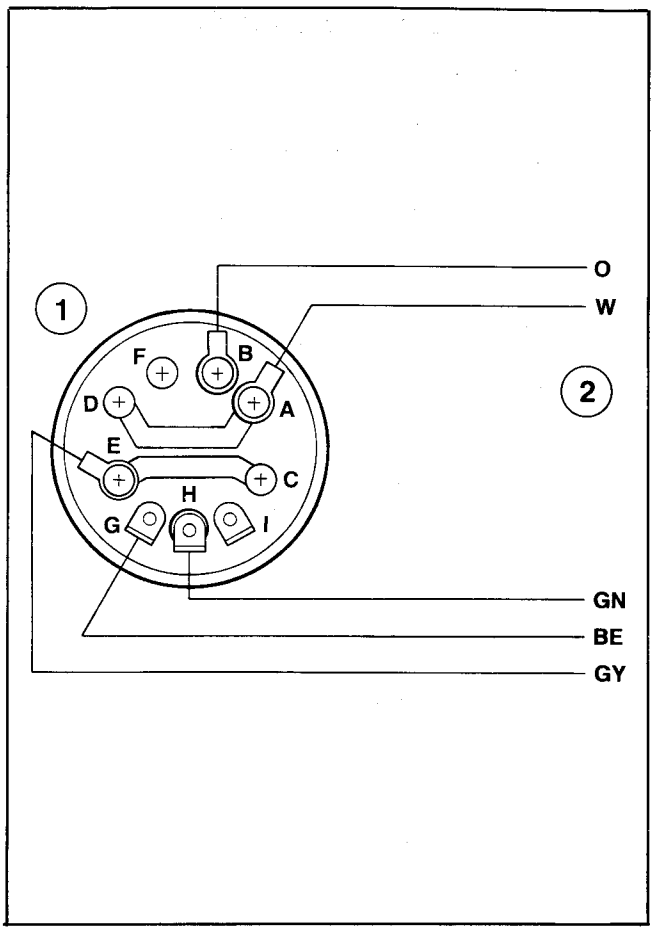

Figure 82 – Color Code For Wiring Key Switch

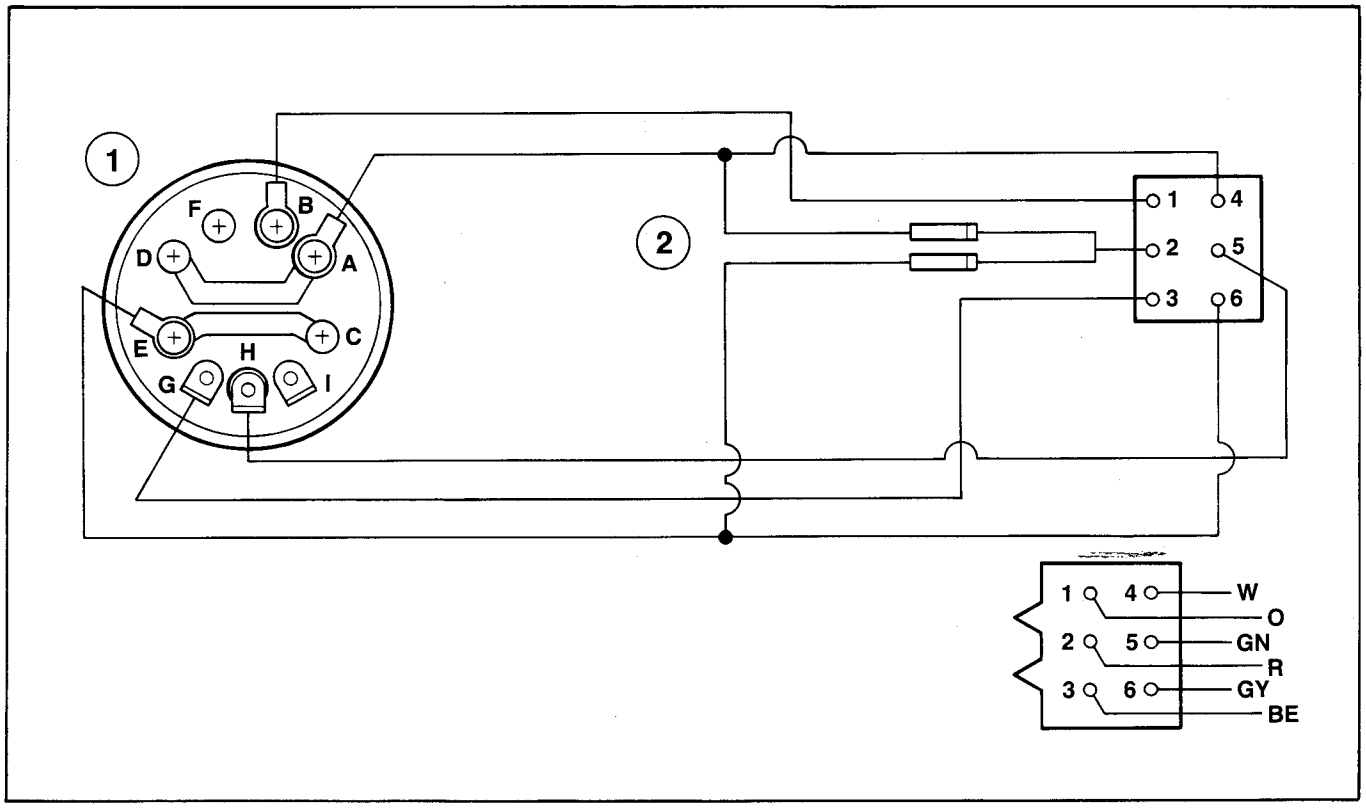

Figure 81 – Directional Key Switch Wiring Diagram

38. SOLENOID TESTING (Figure 83)

Equipment needed for test: 12 volt battery and a battery powered continuity tester or ohmmeter.

NOTE: Bench test can be made with component out of vehicle or with all wires and connections removed from component being tested.

a. Check continuity across side terminals.

b. Apply 12 volts to small terminals, check for solenoid energizing (click).

c. Apply 12 volts to small terminals, check continuity across side terminals.

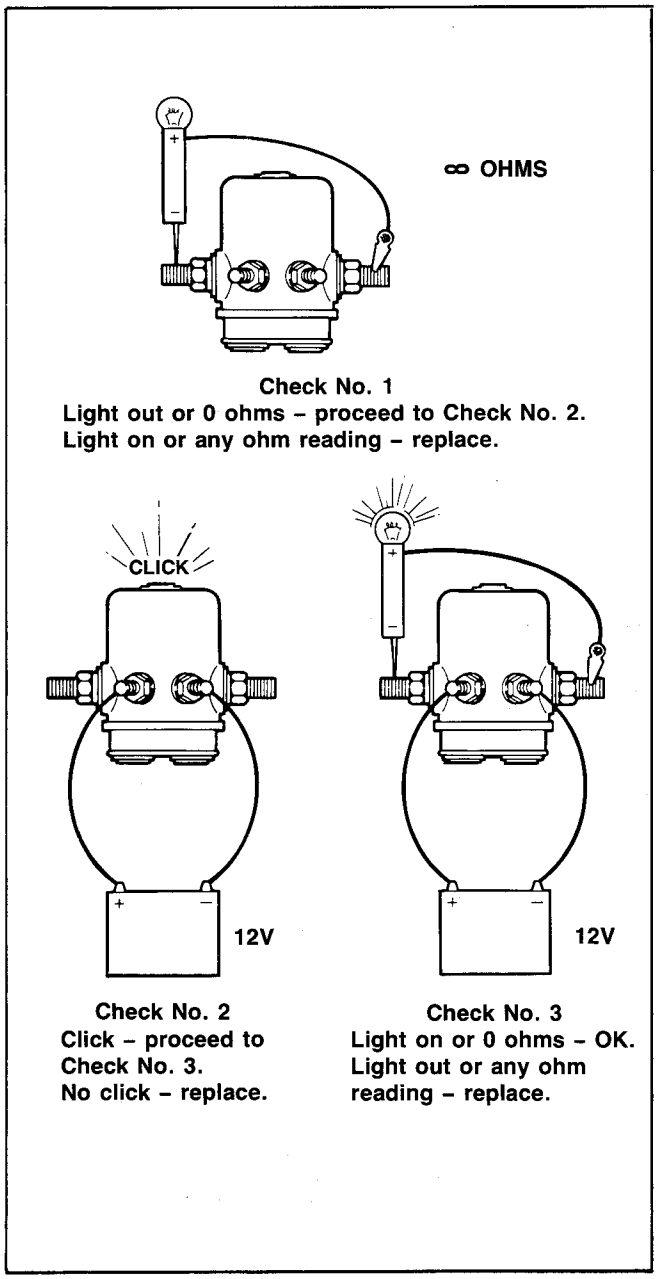

Figure 83 - 3-Step Solenoid Test

39. ACCELERATOR MICRO-SWITCH (Figure 84)

The accelerator micro-switch is mounted under the left side frame cross-channel. The switch is operated by a rod running from the accelerator pedal through the frame cross-channel with cup on end to actuate the micro-switch plunger.

Adjustment

a. Lightly depress accelerator pedal until parking brake is released and accelerator rod touches end of slot in bracket on lower part of accelerator pedal.

b. Cup (2) is adjustable by turning cup on the rod (3) threads after loosening locknut (1).

c. Adjust the cup so micro-switch clicks (closes) after parking brake is released.

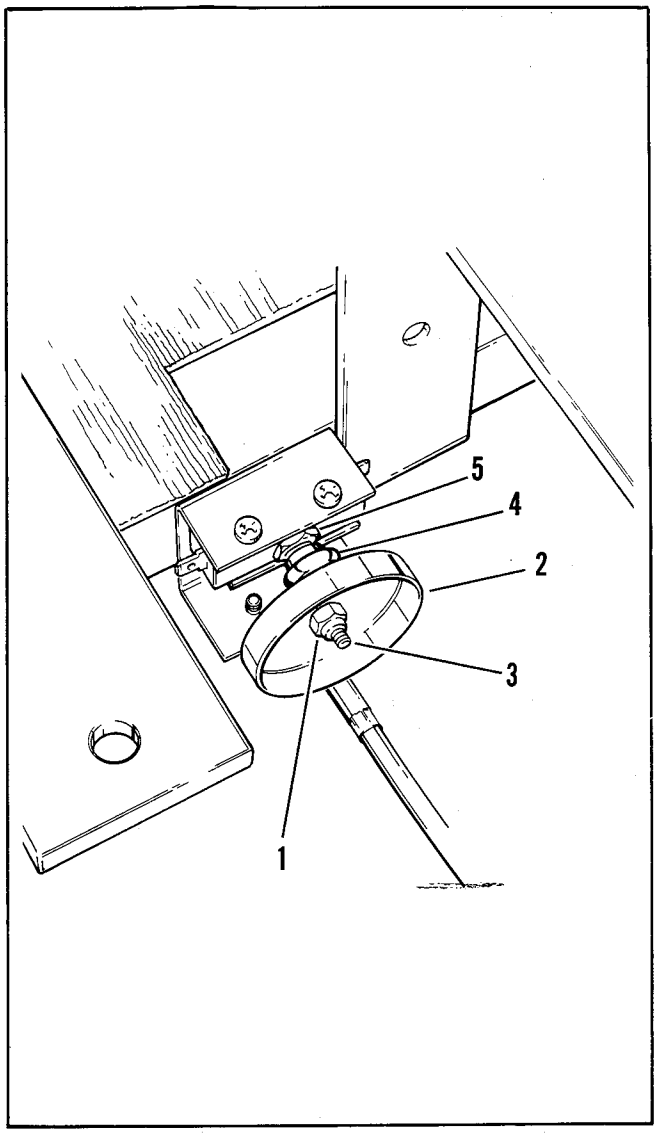

Figure 84 - Accelerator Micro-Switch

Removal

a. Raise the vehicle body.

WARNING

Disconnect the battery cables (negative cable first) to prevent accidental start up of vehicle and possible personal injury.

b. Remove locknut (1), spin off cup (2). Remove switch plunger boot (4).

c. Remove speed nut (5) and pull micro-switch free.

WARNING

ParCar with angle bag rack – to secure body upright and avoid possible personal injury through accidental closing of body, remove body hold-up rod from clip and insert into slot in body frame.

d. See Figure 85. Disconnect single orange wire (1) and single blue wire (2).

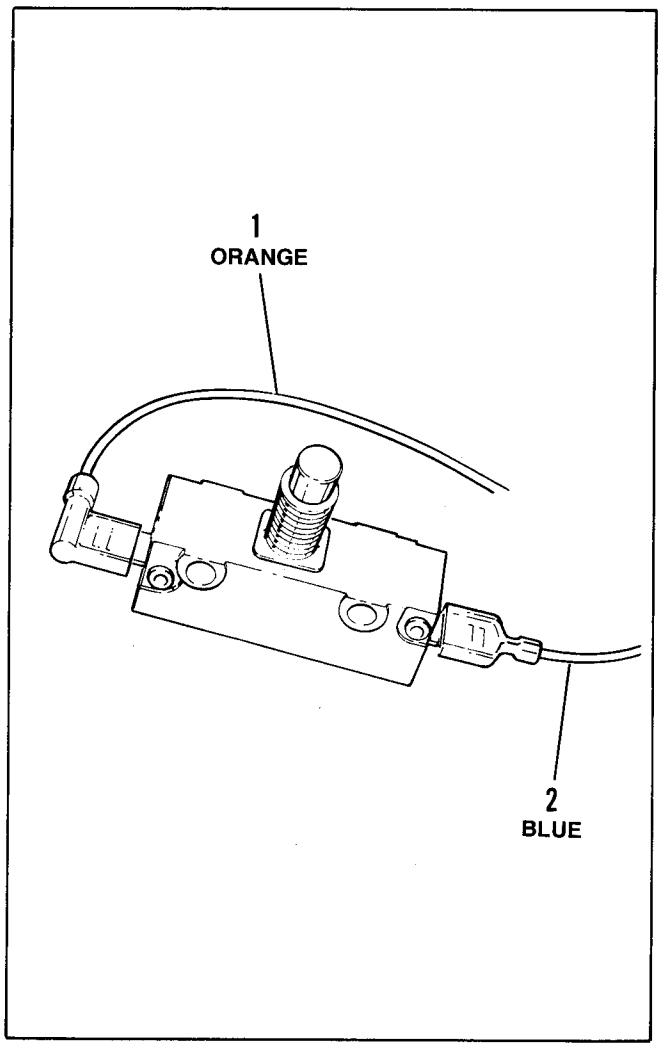

Figure 85 – Micro-Switch

TESTING (OUT OF VEHICLE) (Figure 86)

Equipment required for test: Ohmmeter (set at RX1) or battery powered continuity tester

a. Using ohmmeter or continuity tester, check for continuity. The ohmmeter should be set at RX1 and should have 0 ohms reading. If continuity tester is used, the lamp should light.

b. Push switch plunger several times, both slowly and rapidly, to see if continuity through switch is broken. Replace switch if defective in either test.

Installation

a. Reconnect single orange wire (1), single blue wire (2), Figure 85, and mount switch using speed nut (5), Figure 84.

b. Install switch plunger boot (4) to switch, spin on cup (2) and locknut (1), Figure 84.

c. Adjust micro-switch.

d. Connect battery cables.

e. Lower the vehicle body.

CAUTION

Do not lubricate the micro-switch as oil on contacts will cause micro-switch failure.

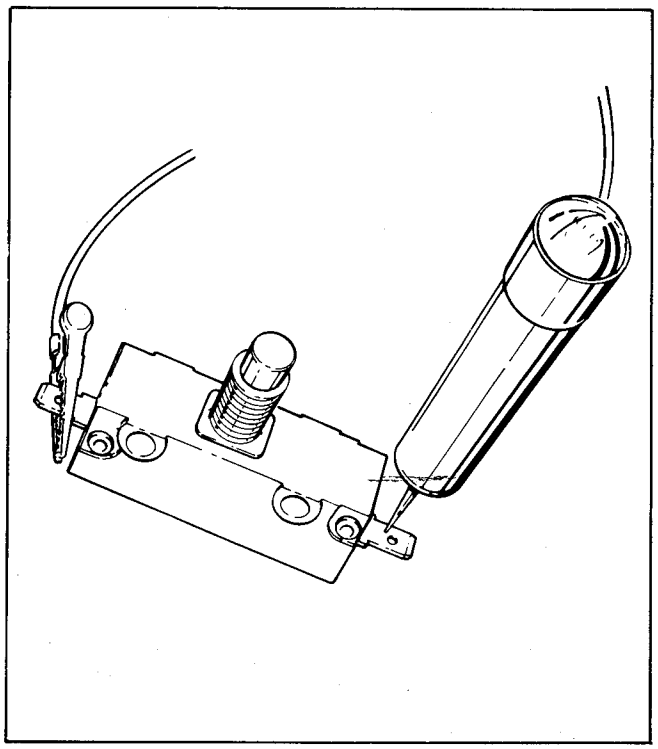

Figure 86 – Testing Micro-Switch

40. SOLID STATE IGNITION

Adjusting timing statically:

a. Remove spark plug from cylinder head.

b. Position plug on top of air shroud so base contacts shroud retaining bolt.

c. Attach spark plug wire to plug.

d. Attach a jumper wire between battery positive (+) terminal and coil positive (+) terminal.

e. Position crankshaft in the forward advanced timing position.

f. Move ignition module clockwise the full extent of the slotted holes, and then, counter-clockwise until a spark occurs at the plug.

g. Lock down retaining screws at this point.

Timing Light:

Timing can also be adjusted or checked using an automotive strobe timing light.

WARNING

When using strobe timing light method, the engine must be running. Support rear of vehicle securely with one wheel off ground. Keep hands away from turning components.

WARNING

The strobe light will cause rotating engine and drive components to *appear* to stand still although they are actually turning. Keep hands and tools away from rotating components.

a. Run engine and shine light on timing marks.

b. Stop engine and move module as required to align marks.

c. Lock down retaining screws and recheck timing.

41. IGNITION COIL

The ignition coil is a pulse transformer that transforms or steps up low voltage to high voltage necessary to jump the electrode at the spark plug in the engine cylinder head. Internally, coil consists of primary and secondary windings with laminated iron core surrounded by oil seated in a cannister. Case cannot be taken apart or coil repaired.

Removal

a. Raise the vehicle body.

WARNING

ParCar with angle bag rack – to secure body upright and avoid possible personal injury through accidental closing of body, remove body hold-up rod from clip and insert into slot in body frame.

WARNING

To avoid accidental start up of vehicle and possible personal injury, disconnect the battery cables (negative cable first) before performing any of the following procedures.

b. Disconnect terminal wires and spark plug wire.

c. See Figure 87. Remove the two mounting bolts (5), washers and lockwashers (6). Remove the coil.

d. See Figure 87. Loosen coil clamp screw (4) and lift coil out.

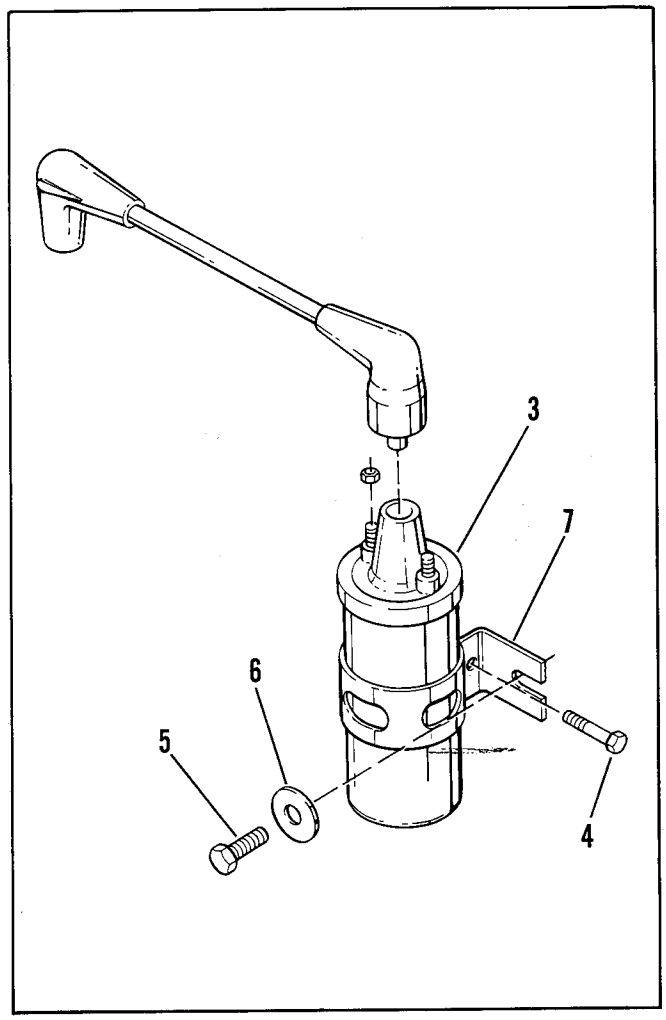

Figure 87 – Ignition Coil

Testing (Figure 88)

a. Disconnect spark plug wire from coil.

b. Disconnect coil terminal wires.

c. Check primary winding resistance. Set ohmmeter to RX1. Reading should be 3.4 to 4.2 ohms.

d. Check secondary winding resistance. Set ohmmeter to RX100. Reading should be 6000 to 9000 ohms.

Cable (Figure 89)

a. Check cable resistance. Set ohmmeter to RX100. Reading should be 3000 to 7000 ohms per foot. A 5.5 inch suppression cable will have 1400 to 3200 ohms. Metallic core cable resistance should be 0 ohms.

b. Replace spark plug cable if inspection indicates that cable is faulty.

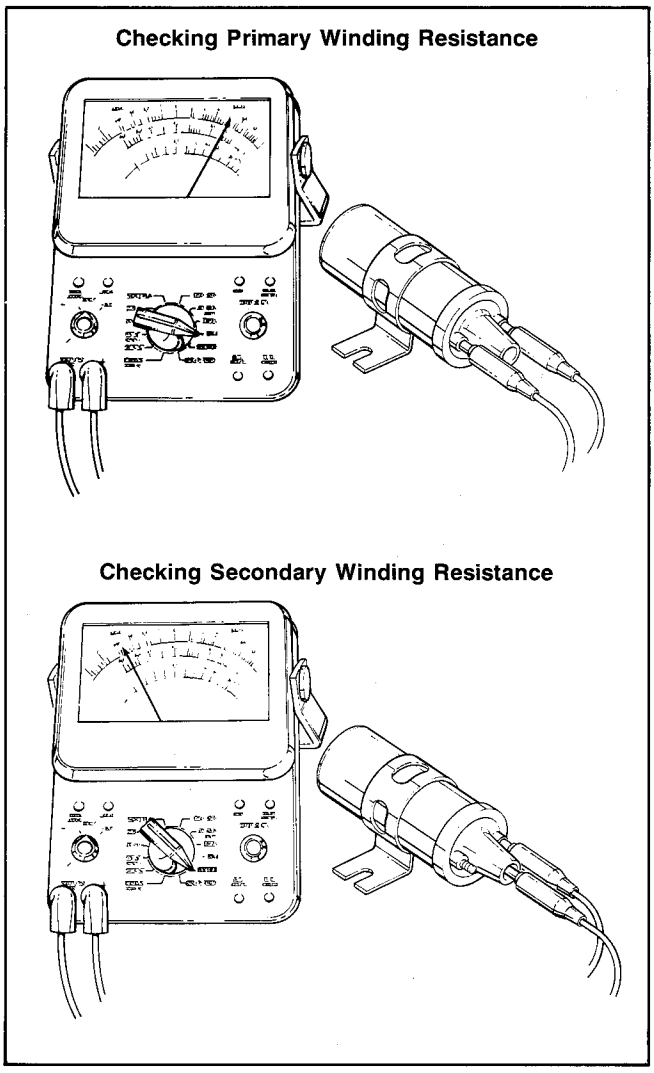

Figure 88 – Checking Winding Resistance

Installation (Figure 87)

a. Mount coil (3) to bracket (7), fasten coil bracket (7) using washers, lockwashers (6) and mounting bolts (5).

b. Connect coil terminal wires as follows: blue wire to (+) positive terminal, black wire to (–) negative terminal.

c. Connect spark plug wire to center post on coil.

d. Connect battery cables.

e. Lower the vehicle body.

42. SPARK PLUGS

Spark plugs are selected to suit a specific engine design and vehicle operating condition. The Champion® 95YC spark plug is designed to give maximum life and efficient combustion of fuel.

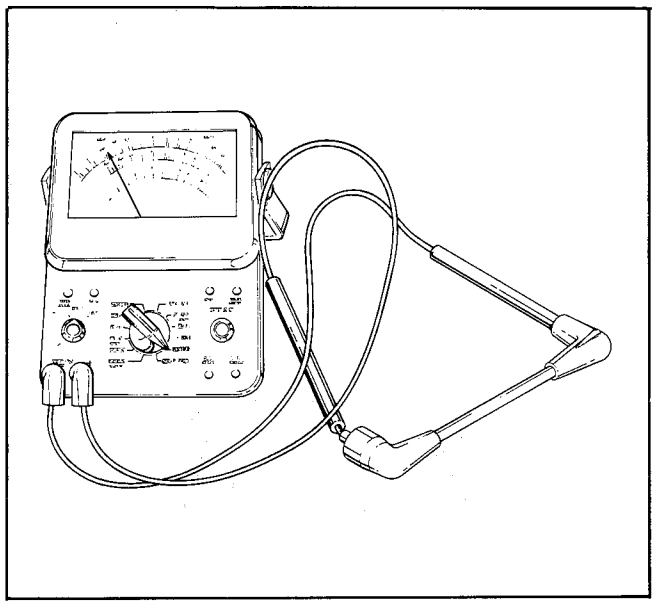

Figure 89 – Checking Cable Resistance

Removal

Use a 13/16 in. deep socket wrench or special spark plug wrench to loosen the plug.

IMPORTANT: Blow away all dirt from plug base with compressed air before removing plug.

Cleaning and Inspection

Examine the plug. The deposit on the plug base is an indication of the correctness of the plug heat range and efficiency as well as a guide to the general condition of engine, fuel and ignition system.

Spark Plug Conditions and Analysis

Core Bridging, Gap Bridging

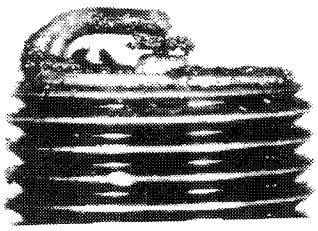

Combustion particles wedged or fused between the electrodes or the core nose and shell.

Both core bridging and gap bridging are caused by excessive combustion chamber deposits striking and adhering to the spark plug's firing end. They originate from the piston and cylinder head surfaces. These deposits are formed by one or a combination of the following:

Excessive carbon if cylinder. Use of non-recommended oils. Improper ratio of fuel/oil mixture.

Wet Fouling

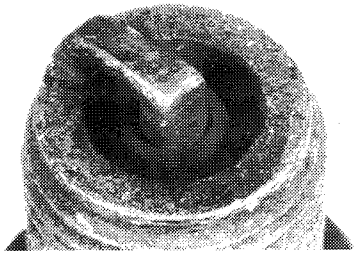

Damp or wet, black carbon coating over engine firing end. Forms sludge in some extreme cases.

Wrong spark plug heat range (too cold). Prolonged slow operation. Low-speed carburetor adjustment is too rich. Improper ratio of fuel-to-oil mixture (too much oil). Worn or defective breaker points, resulting in lack of voltage.

Overheating

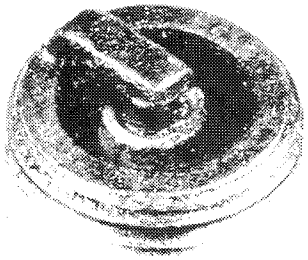

Electrodes badly eroded. Premature gap wear. Insulator has gray or white "blistered" appearance.

Incorrect spark plug heat range (too hot). Ignition timing overadvanced. Consistent high-speed operation.

Preignition

Melted electrodes and/or white insulator indicates sustained preigniton. (Insulator may be dirty due to misfiring or debris in the combustion chamber.)

Check for correct plug heat range, proper lubrication and/or advanced ignition timing. Determine the cause of preignition before putting engine back into service.

Aluminum Throw-Off

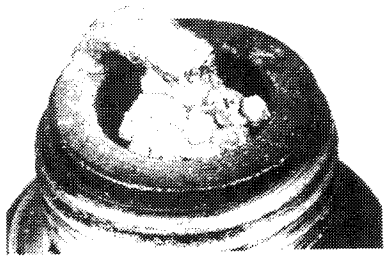

Aluminum deposits on electrodes and insulator core nose.

Caused by first stages of preignition within the cylinder which melts the aluminum alloy of the piston crown. Do not install new plug until piston is examined and the source of preignition is determined.

Normal

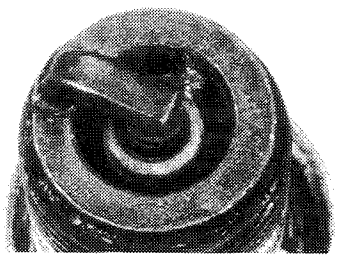

Light tan to gray color and slight electrode wear indicate correct heat range.

Change plugs at regular intervals using same heat range.

Testing Spark Plugs

Check the sparking ability of a cleaned and regapped plug on a sparking comparator if possible. An inability to withstand rapid firing under cylinder compression conditions can be discovered.

Setting Spark Gap

a. Before setting the spark gap on a used plug, pass a thin point file (or nail file) between the electrodes to produce flat, parallel surfaces to facilitate accurate gauging.

b. Use only a wire type gauge. Bend the outside or grounded electrode so only a slight drag on the gauge itself is felt when passing it between the electrodes. Never make adjustments by bending the center electrode. Set gap to .025 in. (.6 mm)

Installing Spark Plugs

NOTE: Before turning the spark plug into the cylinder head, check the condition of threads in head and on the plug. Soften deposits in cylinder head with penetrating oil and clean out with tap or old plug.

a. Install a new spark plug and turn the plug down finger tight. Tighten spark plug to 15-20 ft.-lbs. (2.074-2.765 kgm) torque.

b. Check and if necessary, adjust engine idle setting after installing a new plug.

43. STARTER-GENERATOR

If starter motor fails to turn engine over with directional key switch ON (forward) and the accelerator pedal depressed, the following checks should be made in sequence to find the cause.

NOTE: These checks should be made only after eliminating other possible causes such as discharged battery, loose or corroded battery cables, faulty wiring connection, some mechanical failure within the engine or a slipping belt.

Checking and Adjusting Belt Tension

Belt tension should be checked every month. If starter-generator slips when starter motor operates, adjust belt to correct tension. If engine does not turn over with correct belt tension, check engine freeness with spark plug removed.

To check belt tension, press down on belt midway between pulleys with approximately 6 pounds of pressure. Belt should deflect approximately 1/8 inch. To adjust, loosen lower mounting bolts and upper support arm mounting bolt, pull starter-generator away from engine and tighten upper bolt – then lower bolts. Torque to 12 ft.-lbs. (1.659 kgm).

CAUTION

Belt tension must be checked at least within the first hour of operation to account for any initial stretch or seating of components.

Starting Circuit Test

a. Raise the vehicle body.

WARNING

ParCar with angle bag rack – to secure body upright and avoid possible personal injury through accidental closing of body, remove body hold-up rod from clip and insert into slot in body frame.

WARNING

For all subsequent tests, remove spark plug wire from spark plug to prevent accidental start up and possible personal injury.

STEP I.

Using a short jumper of heavy gauge wire, momentarily touch the ends to the large A solenoid terminals. If starter fails to turn engine, difficulty is in starter or directional key switch.

STEP II.

Switch key to forward position and with accelerator pedal depressed, check voltage on A solenoid control terminals (small). 10-14 volts good. Low or no voltage check diode on key switch. See Paragraph 37, this section. Replace if necessary. If diodes are ok, check for broken red wire. Make sure to activate A solenoid by jumping across large terminals. If solenoid does not make contact, replace.

Diode Test

a. Turn keyswitch to off position. Set volt meter to RX1 scale. Place test lead on diode as shown below. Meter should read 10 OHMS ± 2. If not, replace.

b. Now switch meter to RX10,000 scale. Place test leads on diode as shown below. If meter reads less than 500,000 OHMS, replace diode.

STEP III.

For testing of key switch see DIRECTIONAL KEY SWITCH, Paragraph 37, this section.

Charging Circuit Test

Make the following test to determine if the charging circuit is functioning correctly. Battery must be in good condition and fully charged.

a. Disconnect the green (GN) wire located on starter-generator DF terminal.

b. Using a jumper wire, ground the DF terminal.

c. Connect a voltmeter across the battery terminals and run engine at approximately 2000 RPM. The voltmeter should show an increase in voltage. If no increase in voltage is seen, remove starter-generator and make tests as described in this section.

Removal (Figure 90)

a. Raise the vehicle body.

WARNING

Disconnect battery cables (negative cable first) to prevent accidental start up of vehicle and possible personal injury.

WARNING

ParCar with angle bag rack – to secure body upright and avoid possible personal injury through accidental closing of body, remove body hold-up rod from clip and insert into slot in body frame.

b. Disconnect all wires from starter-generator. Make sure wires are marked for reassembly.

c. Remove upper mounting bolt. locknut from support arm and remove belt.

d. Remove lower mounting bolt, carriage bolt and locknuts.

e. Lift starter-generator out of vehicle.

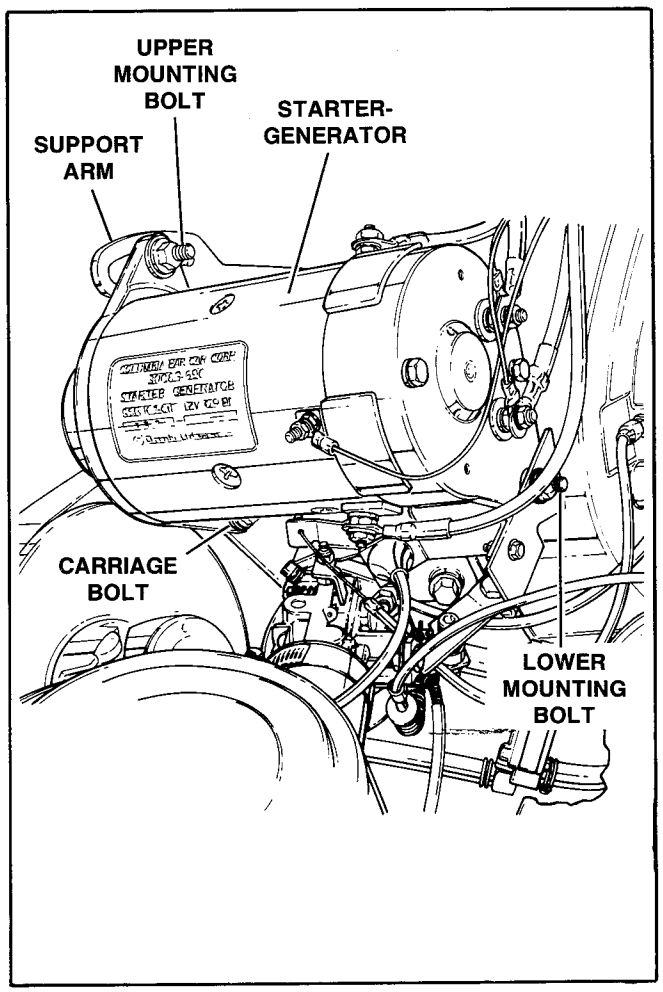

Figure 90 – Starter-Generator Removal

Disassembly (Figure 91)

NOTE: If it is not necessary to remove brushes, they can be held off of commutator with brush springs. See Figure 92.

a. Remove thru bolts and washers (1). Pull commutator end cover (2) free of starter frame (3).

b. Remove brush covers (4), screws and lockwashers (5), brush springs (6) and brushes (7).

c. Remove terminal nuts, washers and lockwashers (8), brush holder screws and lockwashers (9) and brush holder (10).

d. To separate armature (11) from drive end cover (12), remove nut (13), lockwasher (14), pulley (15), shaft key (16), washer (17) and bearing retainer screws (18).

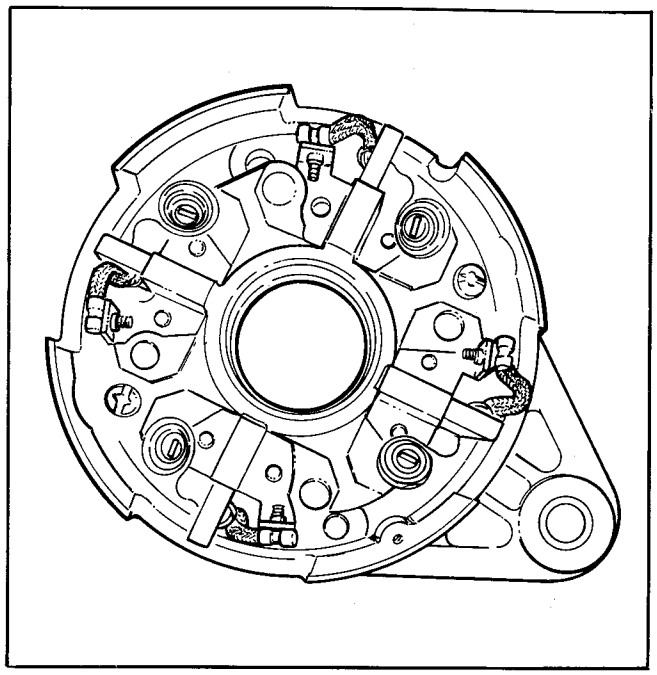

Figure 92 – Holding Brushes Off Commutator

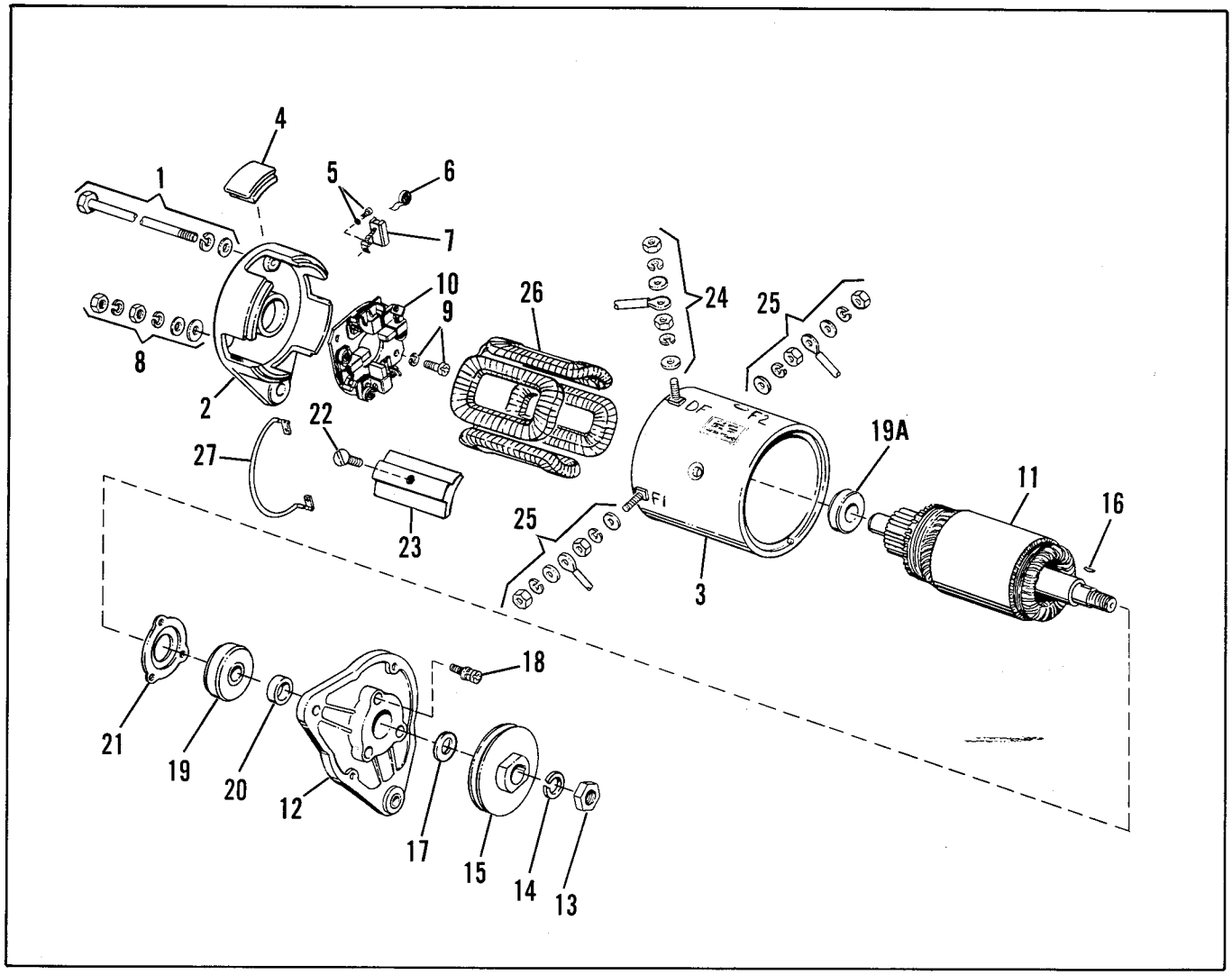

Figure 91 – Starter-Generator Disassembly

e. To separate commutator bearing (19) or drive end bearing (19A) and spacers (20) from armature (11), use claw puller tool and wedge attachment tool. See Figure 93.

CAUTION

Use caution while removing bearing from shaft so as not to damage retainer plate.

f. Remove bearing retainer (21).

NOTE: Do not remove pole shoes unless electrical test indicates it is necessary.

g. Remove pole shoe screws (22), pole (23), DF terminal hardware (24) F1 and F2 terminal hardware (25) and remove field coil (26).

Testing Brushes

a. Visually inspect brushes. Replace brushes which are cracked or severely chipped.

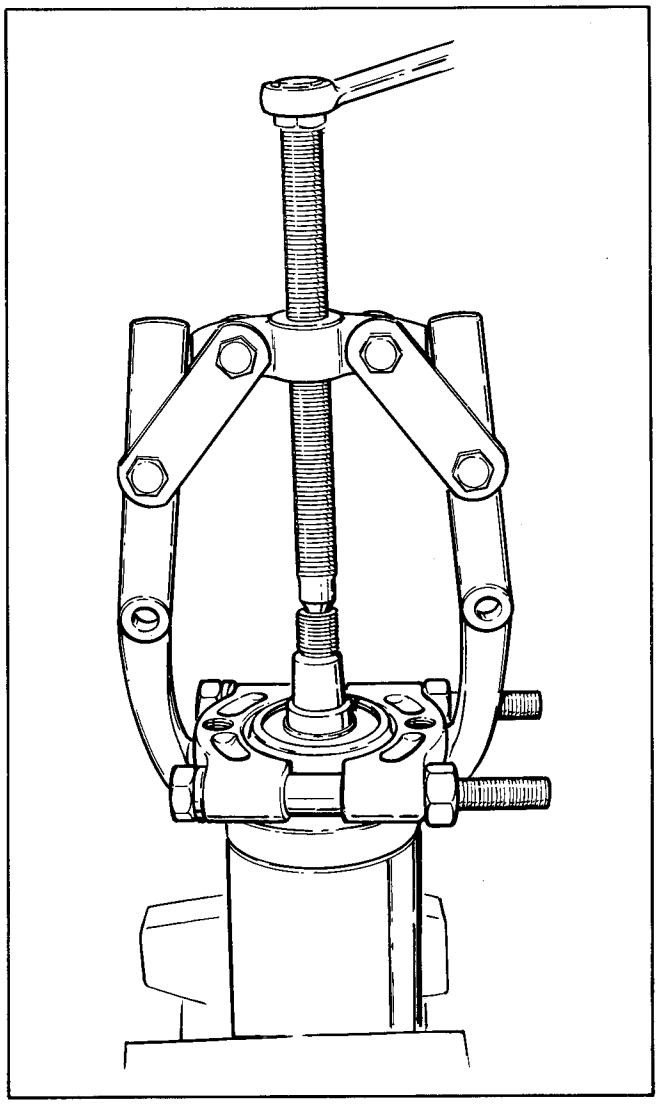

Figure 93 – Removing Armature Bearings

b. Check brush length, Figure 94. If any brush is worn to its minimum length when measured at its shortest point, new brushes are needed. Replace brushes in sets of four only.

Minimum brush length

Hitachi ..... 5/8 in. (15.875 mm)

Cleaning and Inspection

BRUSH SPRINGS

a. Inspect springs. Reject springs which are discolored from heat (straw or blue in color).

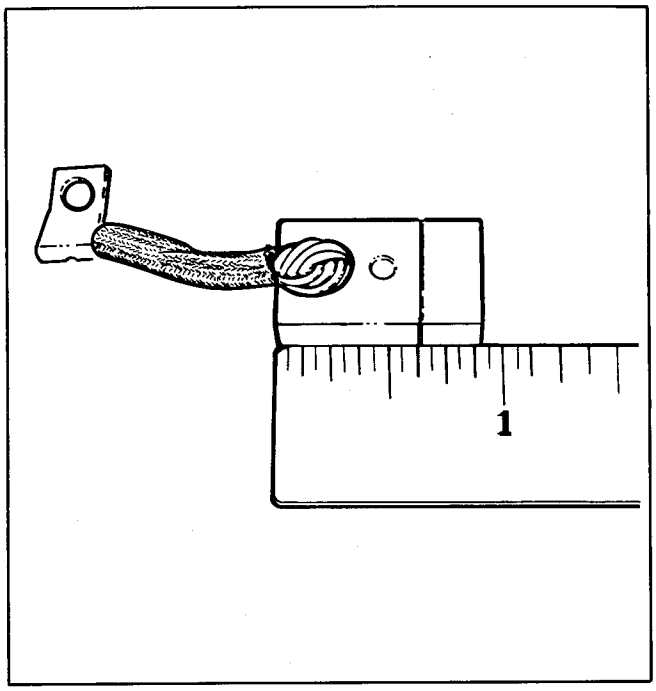

Figure 94 – Measuring Brush Length

b. Test brush spring tension. Use a scale, Figure 95, to test spring tension. Reject springs which apply a force less than 28 ± 4 oz. (680.4 grams).

CAUTION

When checking brush spring tension, do not pull springs beyond the point they would normally be if there were new brushes installed. Exerting excessive force, or pulling brush springs beyond normal resting point will damage springs.

VISUAL INSPECTION OF ARMATURE

Obvious defects can be seen by examining the armature. If an armature has frayed or charred insulation, broken wires or thrown solder, it is obvious, without further testing, that it should be replaced.

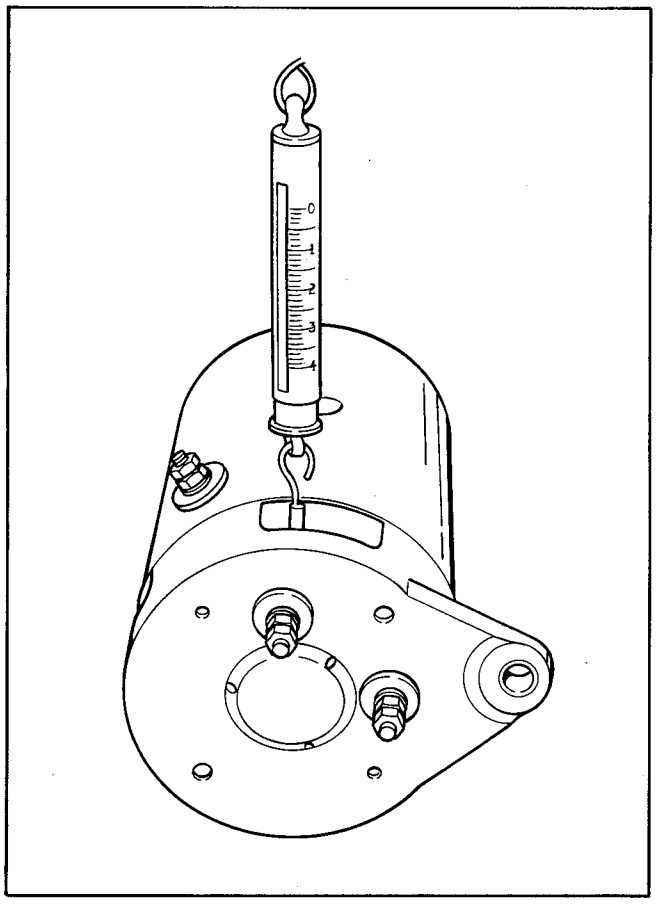

Figure 95 – Test Brush Spring Tension

Faults seen during the visual inspection can aid in diagnosing the original cause of failure.

Visually check armature for:

1. Burned, charred or cracked insulation.
2. Thrown solder.
3. Worn, burned or glazed commutator.
4. Loose commutator bars.
5. Bruised armature core laminations.
6. Worn armature bearing or shaft.
7. Dirty or oily commutator.

TESTING ARMATURE WITH ARMATURE TESTER (GROWLER) (Figure 96)

NOTE: Before testing, wipe armature with clean rag and blow carbon dust and metal particles from between commutator bars.

CAUTION

Do not submerge armature in solvent.

A completely GROUNDED or SHORTED armature will prevent a starter-generator motor from operating. However, an armature may have an open or high resistance winding and still operate at a lower efficiency than normal.

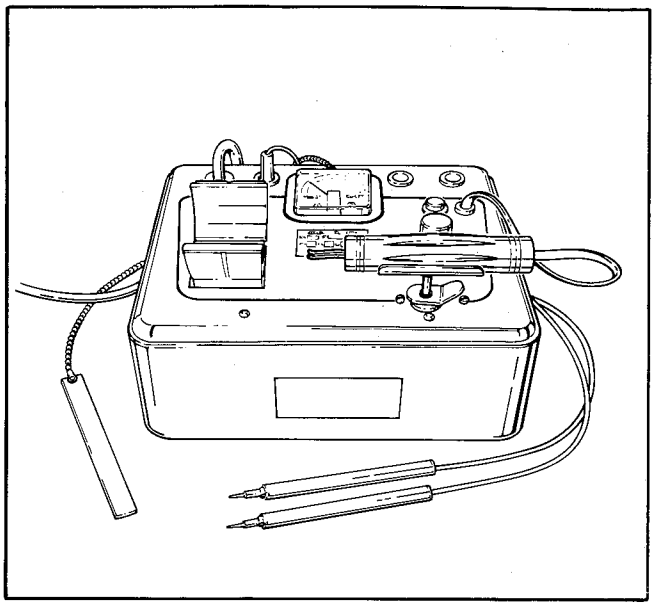

Figure 96 – Armature Tester

ARMATURE GROUND TEST (Figure 97)

a. Plug in tester.

b. Place armature in growler.

c. Turn on tester.

d. Touch one test probe to commutator and other to armature core. Test lamp should be OFF, indicating no continuity. If the test lamp is on, the armature is grounded and must be replaced.

NOTE: The armature ground test can also be performed in the same manner with a continuity tester or ohmmeter.

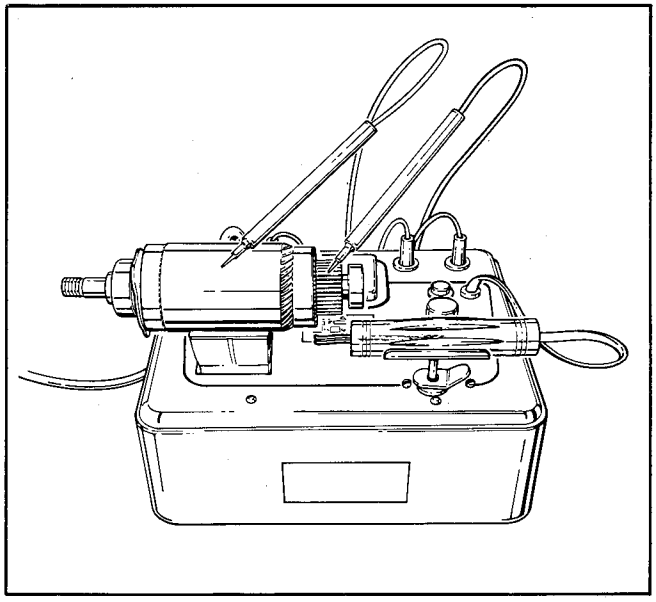

Figure 97 – Armature Ground Test

ARMATURE SHORT TEST (Figure 98)

a. With armature in same position as previous test, turn tester on.

b. Using steel blade provided with tester, or hack saw blade, hold blade parallel with and touching armature core.

c. Slowly rotate armature one complete revolution in growler. If the armature is shorted the blade will vibrate on the armature core. Shorted armatures must be replaced.

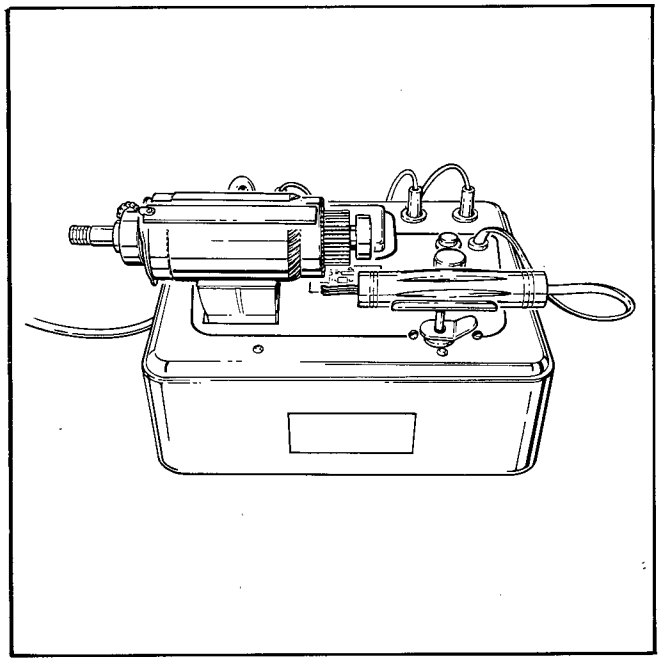

Figure 98 – Armature Short Test

ARMATURE COIL BALANCE TEST (Figure 99)

The armature coil balance test is designed to determine whether all the coils are of equal efficiency. This is essential for maximum motor generator performance and also to prevent rapid commutator burning. A wide variance in coil efficiency will reduce the performance of the starter-generator motor and overheat the entire assembly.

a. With armature in same position as previous tests, turn tester on.

b. Turn sensitivity control clockwise to stop.

c. Place contact handle in cradle and position cradle so contacts of handle touch a pair of commutator bars.

d. Position contact handles to obtain highest reading on meter. Set cradle to hold contact handle in this position.

e. Slowly rotate armature one complete revolution pausing to note reading on meter of each pair of commutator bars. The highest reading of each pair of commutator bars should be even within one division of the lowest reading. If reading for a particular pair of bars is noticeably lower, an open or poor connection exists in the winding.

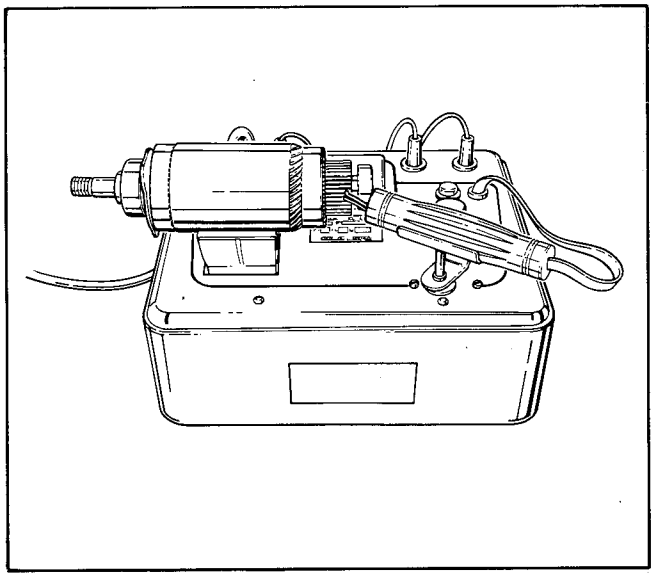

Figure 99 – Armature Coil Balance Test

GROUNDED FIELD TEST (Figure 100)

a. Attach continuity tester or ohmmeter between F1 terminal and motor frame. Continuity tester should not light, ohmmeter should read (∞) infinity.

b. Grounded fields should be replaced.

c. Check continuity between F1 and F2 terminals.

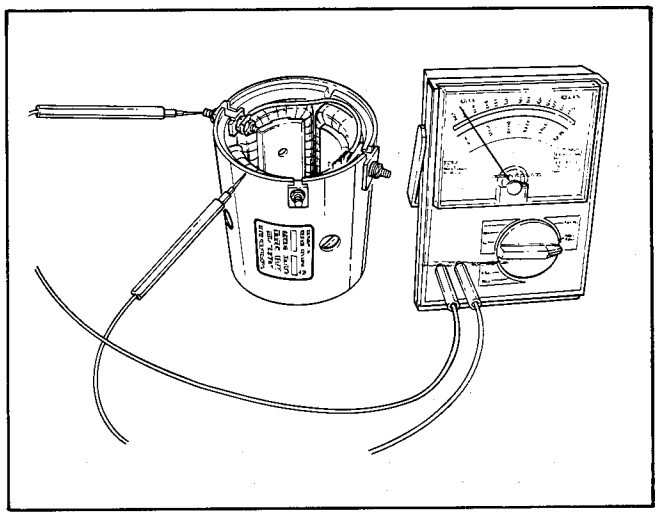

Figure 100 – Grounded Field Test

REFINISHING COMMUTATOR (Figure 101)

To refinish commutator, mount armature in lathe and diamond turn commutator. Limit depth of cut to .005 in. (1.27 mm) of less and repeat cut as often as required. Do not reduce commutator diameter to less than specified.

Commutator Minimum Diameter

Hitachi ..... 1.535 in. (39 mm)

After commutator is turned, the mica insulation between segments must be undercut .031 (1.32) in. (.8 mm). Undercutting should be done with special undercutting equipment. If one is not available, satisfactory undercutting can be carefully done with a piece of hack saw blade. Carefully trim blade thickness until offset teeth are the same width as slots in commutator. Slots must be square bottomed for best results. Finish cut commutator after undercutting, and check for excessive commutator runout. Runout should not exceed .001 in. (.025 mm).

VISUAL INSPECTION OF FIELD COILS

If the insulation on the field coils appears blackened or charred, the serviceability of the coils is questionable.

Burned or scorched coil insulation indicates the motor has overheated due to overloads, grounded or shorted coil windings.

Check for loose pole shoes.

OPEN FIELD TEST (Figure 102)

a. Set ohmmeter to RX1 scale.

b. Connect ohmmeter to F1 and DF terminals.

c. Resistance should read 4.5 to 5.5 ohms.

d. Connect ohmmeter to DF terminal and housing (∞ reading).

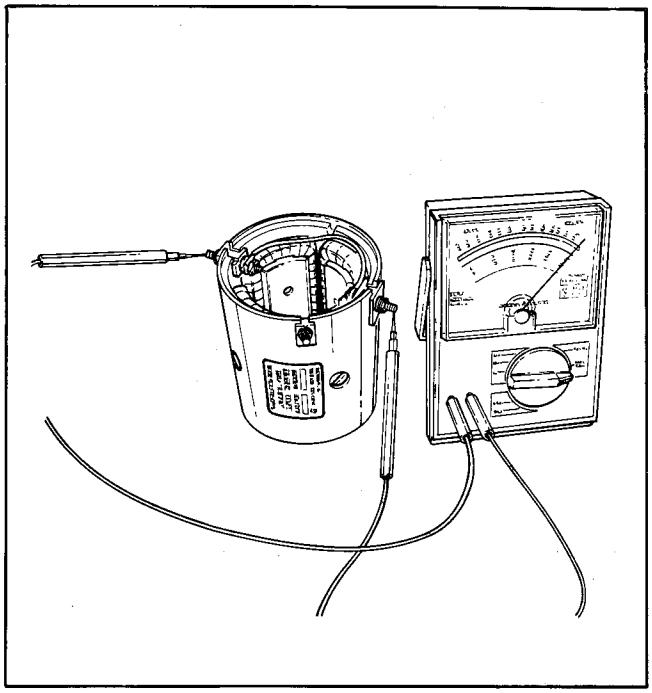

Figure 102 - Open Field Test

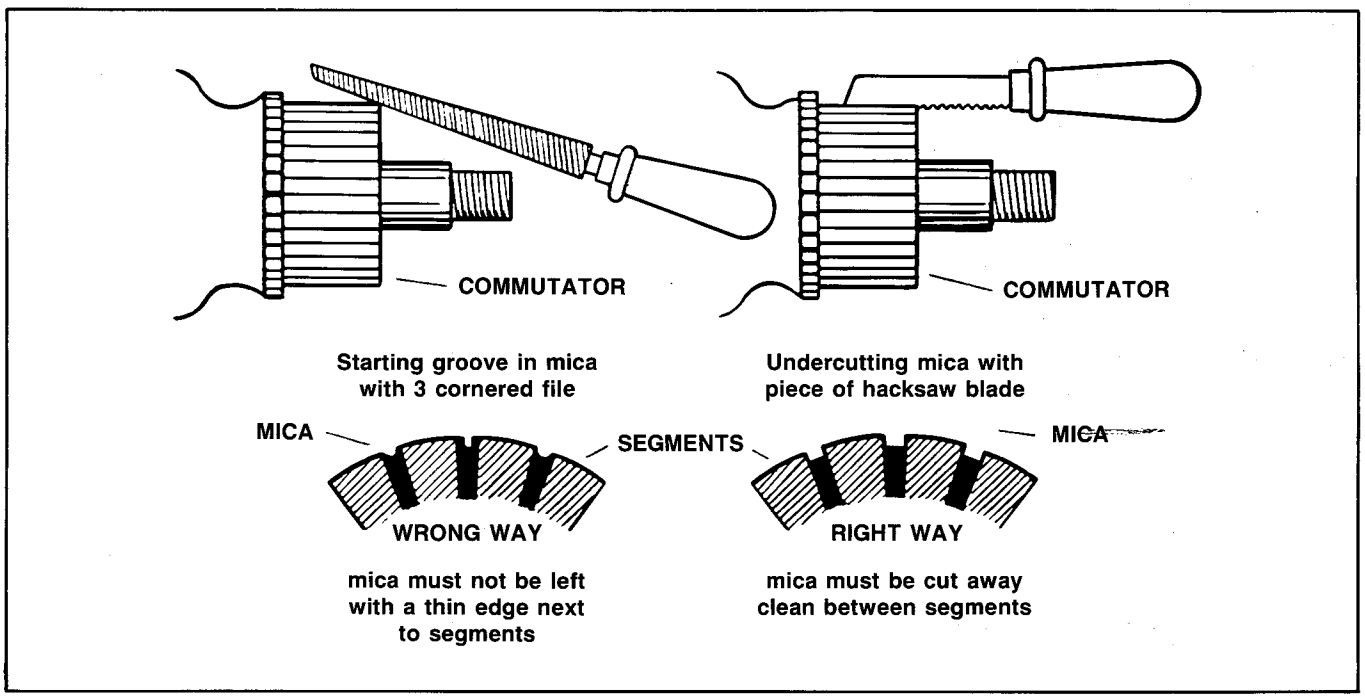

Figure 101 - Recessing the Mica Separators

Assembly (Figure 91)

a. Install field coil assembly (26) into frame (3) and secure using pole shoes (23) and pole screws (22). Tighten pole shoe screws to 9 ft.-lbs. (1.2 kgm) torque.

CAUTION

Route field terminal wires so that they will not contact armature.

b. Connect field coil wires are follows:

- Single **Red** Wire to **DF** terminal.
- **Red** Wire and **Metal Strap** to **F1** terminal.
- **Metal Strap** to **F2** terminal.

c. Figure 91 shows correct stacking of wire mounting bolt hardware (24), (25).

CAUTION

Use caution while pressing bearing on shaft so as not to damage bearing retainer (21).

d. Install bearing retainer (21) on drive end of shaft, press bearing (19) onto shaft, pressing bearing (19A) on commutator end of shaft.

e. Install brush springs (6), brushes (7), screw and lockwasher (5) to brush holder (10) and fasten brush holder (10) to commutator end cover (2) with screws and washers (9).

f. Install armature (11) into drive end cover (12) and tighten bearing retainer screws (18).

g. Slide frame (3) over armature (11) and locate pins used for aligning. These locating pins in body should align with holes in end covers.

NOTE: Hold brushes off commutator by lifting brush springs and pulling brushes back until the springs rest on the side of the brushes, Figure 92.

h. Install commutator end cover, aligning cover hole with body pin and install through bolts and washers (1), terminal nuts, washers and lockwashers (8) and install brush covers (4).

i. Install spacer (20), washer (17), shaft key (16), pulley (15), lockwasher (14) and nut (13). Tighten pulley nut (13) to 26-33 ft.-lbs. (3.59-4.56 kgm) torque.

Installation (Figure 90)

a. Install carriage bolt (3), mounting bolt (2), locknuts (4) through lower mounting holes of starter-generator. Tighten lower mounting bolts (2 and 3) to 12 ft.-lbs. (1.659 kgm) torque.

b. Install belt (9), upper mounting bolt (1), and locknut (4). Tighten upper adjusting bolt (4) to 12 ft.-lbs. (1.659 kgm) torque.

c. Adjust belt, see Checking and Adjusting Belt Tension, this section.

d. Connect starter-generator wires.

e. Connect battery cables.

f. Lower the vehicle body.

44. VOLTAGE REGULATOR

A "solid-state" voltage regulator is used to control the generator output. It is a sealed unit and not adjustable.

If trouble is experienced with the electrical system it is first necessary to determine if the generator or the voltage-regulator is faulty.

To determine if the generator is functioning properly, test starter-generator, Paragraph 43, this section.

CAUTION

Do not ground regulator DF terminal (green wire) with the regulator wire attached. Remove generator field wire from terminal and ground the DF terminal of generator with jumper when making output tests.

Testing Voltage Regulator in Vehicle

Make the following test to determine if the regulator is functioning correctly. Battery must be in good condition and fully charged. Engine must be warmed up so that regulator is at normal operating temperature.

a. Lift rear wheel. See LIFTING INSTRUCTIONS, SECTION 1.

b. Attach voltmeter across battery.

c. With the regulator in place and the regulator at operating temperature, run the engine at approximately 3150 RPM (governed speed in forward direction) and read the voltmeter.

d. If voltmeter reads within specified voltages 14.5-15.5 at approximately 75° air temperature surrounding the vehicle, it indicates that the voltage regulator is functioning properly.

e. If voltmeter reading is above upper limit, generator charging rate is too high and will overcharge the battery causing possible internal battery damage.

f. If voltmeter reading is under lower limit, charging rate is too low and may result in a discharged battery.

Removal

a. Raise the vehicle body.

WARNING

ParCar with angle bag rack – to secure bocy upright and avoid possible personal injury through accidental closing of body, remove body hold-up rod from clip and insert into slot in body frame.

WARNING

Disconnect battery cables (negative cable first) to prevent accidental start up of vehicle and possible personal injury.

b. Disconnect voltage regulator wires.

c. Remove the mounting screw and remove the voltage regulator.

Installation

a. Install the mounting screw and tighten to secure voltage regulator.

b. See wiring diagram, Figure 103. Reconnect the voltage regulator wires as follows:

RED WIRE (R) to generator side of solenoid.
GREEN WIRE (G) to tab (male) terminal DF.
BLACK WIRE (BK) to receptacle (female) terminal A-1.

c. Connect battery cables.

d. Recheck voltage regulator wires. See applicable wiring diagram. Test voltage regulator. See Testing Voltage Regulator in Vehicle, this section

e. Lower the body.

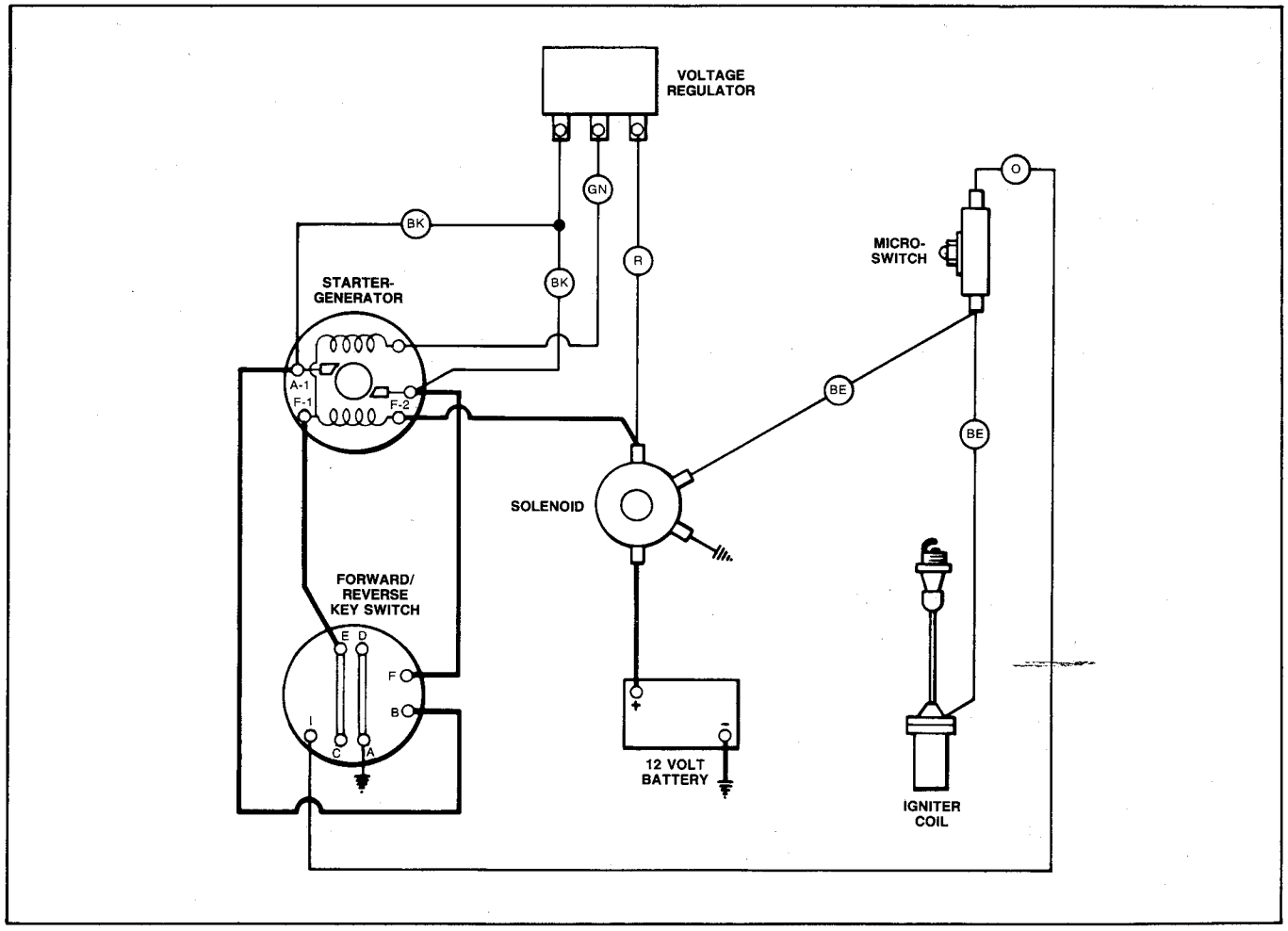

Figure 103 – Wiring Diagram

45. GASOLINE VEHICLE BATTERY

Water cannot be added to this battery. The maintenance free battery is completely sealed except for a small vent in each side. The small amount of gases produced in the battery will escape through these vents.

NOTE: At normal charging rate the gases emitted will be of a small amount, however, a well ventilated area is recommended.

The battery is designed to withstand some of the damaging effects of overcharging, but overcharging can still severely damage the battery.

The vents require keeping the battery in an upright position to prevent electrolyte leakage. Tipping the battery beyond a 45° angle in any direction can allow a small amount of electrolyte to leak out the vent hole. DO NOT exceed this 45° angle when carrying or installing the battery because of its dangerous chemicals which could caused severe personal injury when accidentally coming in contact with skin, eyes or clothing.

WARNING

Batteries contain sulphuric acid, which is highly corrosive and can cause chemical burns. Avoid contact with skin, eyes or clothing. Always wear approved eye protection when working around batteries.

Antidote

External – Flush with water.

Internal – Drink large quantities of milk or water, followed by Milk of Magnesia, vegetable oil or beaten eggs. Call doctor immediately.

Eyes – Flush with water, get immediate medical attention.

Visual Inspection and Maintenance

Check for obvious damage such as cracked or broken case or cover that could permit loss of electrolyte. If obvious physical damage is noted, replace battery.

Be sure battery hold downs are properly tightened. A loose hold down may allow the battery to become damaged from vibration or jarring. A hold down that is too tight may buckle or crack the battery case.

To determine whether battery needs charging, see LOAD TESTING, this section.

Removal (Figure 104)

WARNING

Disconnect the battery cables (negative cable first) to prevent accidental start up of vehicle and possible personal injury.

a. Raise the vehicle body.

WARNING

ParCar with angle bag rack – to secure body upright and avoid possible personal injury through accidental closing of body, remove body hold-up rod from clip and insert into slot in body frame.

b. Remove the bolt (3) and lift off hold down bracket (4).

WARNING

When lifting out battery DO NOT tip beyond the 45° angle in any direction to avoid electrolyte leakage.

c. Lift out battery.

d. Install battery in reverse order.

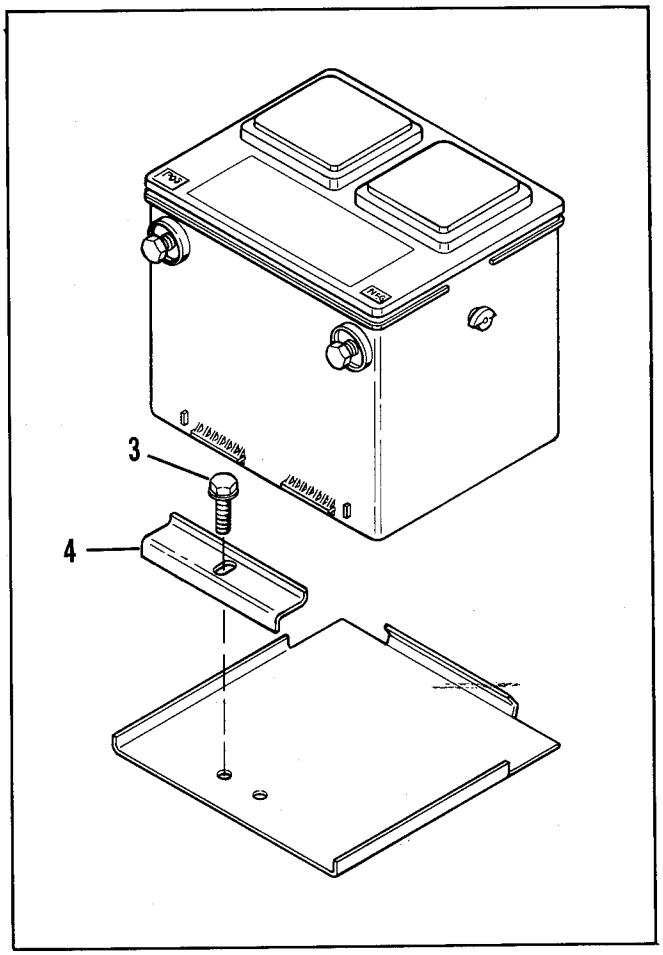

Figure 104 – Battery Removal

Charging

WARNING

The gases produced by a storage battery on charge are highly explosive. To prevent possible personal injury, charge batteries in a well ventilated area, keep fire and flame away from charging batteries and do not work around charging batteries with tools that could cause a short circuit resulting in a spark. Always shield eyes when working near charging batteries.

BATTERY IN VEHICLE

a. Attach positive charger cable (+) to positive (+) terminal on battery.

b. Attach negative charger cable (−) to negative (−) terminal on battery.

c. Follow Table 5 for desired charging rate.

BATTERY OUT OF VEHICLE

a. Thread a 3/8-16 bolt into each terminal, hand tight, Figure 104.

b. Attach positive charger cable (+) to bolt in positive (+) terminal on battery.

c. Attach negative charger cable (−) to bolt in negative (−) terminal on battery.

d. See Table 5 for desired charging rate.

Table 5
CHARGING RATES

SLOW CHARGE RATE	FAST CHARGE RATE
5 amps for 10 hours or 10 amps for 5 hours	20 amps for 2-1/2 hours or 30 amps for 1-1/2 hours

WARNING

If battery case feels hot (approximately 125° or more), and/or emits gases and/or fluid boils from vent, stop charging procedure at once. Let battery cool to room temperature and resume charging battery at a lower amp charge per hour. Failure to stop charging procedure could result in personal injury and/or damage to the battery.

Load Testing

NOTE: Battery *must* be fully charged before load test.

a. Connect load tester to battery and remove surface charge (excess voltage) by running a 300 amp load across terminals for 15 seconds.

b. Load battery to 130 amps.

c. Read voltage after 15 seconds of load and then remove load.

d. Minimum voltage, see Table 6, will determine if fully charged battery is good. If voltage is below minimum, replace battery.

Table 6

VOLTAGE REQUIREMENTS AT AMBIENT TEMPERATURES

If Temperature is	70°F (20°C) & Above	60°F (16°C)	50°F (10°C)	40°F (4°C)	30°F (-1°C)	20°F (-7°C)	10°F (-12°C)	0°F (-18°C)
Then Minimum Voltage Needed Is	9.6	9.5	9.4	9.3	9.1	8.9	8.7	8.5

State of Charge	Freezing Point F°	Freezing Point C°	Risk of Sulfation
100%	-70°	-57°	Low
75%	-39°	-38°	Low
50%	-16°	-26°	Low
25%	-2°	-19°	Moderate
Discharged	+17°	-8°	High

Storage

a. Battery can remain in car.

b. Fully charge battery.

c. Clean battery top and connections.

d. Fully charged battery should be stored in as cold an environment as possible. Batteries "self discharge" when not in use. The colder the temperature, the slower batteries self discharge.

CAUTION

A battery in low state of charge (low specific gravity readings) will freeze at low temperatures.

Check battery every 8 to 10 weeks and recharge as necessary to bring the battery to 75%-100% specific gravity to prevent battery from freezing.

As ice forms in a freezing battery, the electrolyte expands and can crack the base, ruining the battery.

If a battery is allowed to stand or is operated in a discharged condition for a long period of time, lead sulphate may develop on the plates, which is dense, hard and crystalline, and which cannot be electrochemically converted to normal active material again.

Lead sulphate formed on the plates during discharge is relatively insoluable as long as the specific gravity of electrolyte is kept above 75% specific gravity, but if allowed to drop below this value, the lead sulphate becomes increasingly soluable and may migrate into the pores of the separators and deposit as a white crystalline mass. Subsequent charging may convert these deposits into filamentous metallic lead which may "short" the positive and negative plates through the areas affected. These small shorts may cause a condition of low cell voltage when battery is allowed to stand idle in less than 25% charged condition.

46. ELECTRIC VEHICLE BATTERY

The storage battery receives, stores and delivers electrical power. The battery does not manufacture electricity. It merely stores it in chemical form for later use. This receiving, storing and delivering of electrical power is called a cycle.

Receive – Charging vehicle batteries.

Store – Vehicle standing idle.

Deliver – Driving vehicle.

Batteries furnished for electric vehicle operation are specially constructed for this type of service.

Automotive batteries are designed to furnish high current draws for short durations, and are kept in a near fully charged state by the charging system. Electric vehicle batteries must be able to furnish currents up to 50 amperes for long durations, and also be able to supply that current while in a partially discharge condition. This type of service requires a deep cycle battery – a battery that is durable enough to withstand repeated complete cycling. For this reason electric vehicle batteries are constructed with heavier plates, and cells with a greater capacity for electrolyte.

CAUTION

Only batteries designed for electric golf car service should be used.

WARNING

Batteries contain sulphuric acid, which is highly corrosive and can cause chemical burns. Avoid contact with skin, eyes or clothing. Always wear approved eye protection when working around batteries.

Antidote

External – Flush with water.

Internal – Drink large quantities of milk or water, followed by Milk of Magnesia, vegetable oil or beaten eggs. CALL DOCTOR IMMEDIATELY.

Eyes – Flush with water, get immediate medical attention.

Visual Inspection and Maintenance

Batteries should be carefully inspected every week, 6 hours of operating time, or every 10 rounds of play. This procedure should also be followed before any tests are performed on the batteries.

a. Battery must be clean and dry. Dirt and electrolyte on top of battery causes battery to self discharge. Clean battery top with baking soda (sodium bicarbonate) and water solution (5 teaspoons baking soda per quart water). Do not allow solution to enter cap vent holes.

b. Inspect battery posts, clamps, and cables for breakage, loose connections and corrosion. Clean posts and clamps.

c. Be sure battery hold downs are properly tightened. A loose hold down may allow the battery to become damaged from vibration or jarring. A hold down that is too tight may buckle or crack the battery case.

d. Check to see that battery cap vent holes are clear. Plugged vent holes will not permit gas to escape from the cell and could result in battery damage.

e. Check electrolyte level. Sufficient water should be added to cover plates before charging, then after charging, remaining water can be added to bring electrolyte to correct level.

f. Inspect battery case for cracks or leaks.

Charging

The lead-acid storage battery supplies electrical power through chemical action. This action is reversible, which means the battery must be connected to a charger and have an electrical current passed through it in the direction opposite to the direction of discharge in order to restore the battery's active chemicals.

CAUTION

Overcharging is harmful. Batteries should be charged just long enough to bring them up to full charge and no more. The state of charge can be tested accurately with a Hydrometer. See Testing Battery.

WARNING

The gases produced by a storage battery on charge are highly explosive. To prevent possible personal injury, charge batteries in a well ventilated area, keep fire and flame away from battery charging area and do not work around charging batteries with tools that could cause a short circuit resulting in a spark. Always shield eyes when working near charging batteries.

CHARGING PROCEDURE

a. Check electrolyte level in all cells and add water as necessary to cover tops of plates.

b. Be sure charger is turned OFF, and plug charger receptacle into car.

c. Determine state of charge and charging time using Tables 7, 8 and 9.

NOTE: The specific gravity check is a more accurate method of determining required charging time than is the number of holes played.

d. Set timer on charger to appropriate time as determined in previous step. Charger turns off automatically at end of set period. Note "finished charge rate" as indicated by ammeter on charger. Batteries are fully charged when finish charge rate is approximately 3 amps immediately before charger turns off. A higher finish rate indicates aging or defective battery or batteries. If finish rate is above 8 amps, batteries should be tested. See Testing Battery.

e. After charging, check electrolyte level and add water as necessary to triangle or split ring of each cell.

CAUTION

Avoid further charging after the batteries are fully charged and equalized. Practicle charging time maximum limit is 12 hours.

Table 7

State of Charge	Specific Gravity (80°F)
100%	1.250-1.270
75%	1.220-1.240
50%	1.190-1.210
25%	1.160-1.180
Specific Gravity Taken From At Least 2 Cells of Each Battery	

Table 8

State of Charge (80°F)	Charging Time
1.260 to 1.280 sp. gr.	none needed
1.240 to 1.260 sp. gr.	4 hours
1.220 to 1.240 sp. gr.	8 hours
below 1.220 sp. gr.	12 hours

Table 9

Golf Car Use	Charging Time
9 Holes or Less	7 Hours
18 Holes or More	12 Hours

CONDITIONS WHICH AFFECT CHARGING

a. If car is used only occasionally, a refresher charge should be given prior to using the car. Use specific gravity reading to determine length of refresher charge.

b. Fleet cars should be rotated so that all cars are used the same amount of time.

c. Battery efficiency is affected by temperature, see Table 10.

Table 10

Comparison of Power Available From Fully Charged Batteries at Various Ambient Temperatures
80°F - 100%
32°F - 65%
0°F - 40%

If the temperature of the outside air and/or batteries is below 60°F, battery capacity is reduced. Batteries will require more frequent and longer charge periods in early spring, fall and winter. It will help to put batteries on charge while they are still warm from use.

d. As batteries age, they finish charge at progressively higher charge rates and tend to use more water. At this point in battery age, the battery's life can be extended by reducing the hours on charge. For example, a 12 hour charge, as determined by the specific gravity readings, can be reduced to 10 hours after approximately one year, or 100 rounds or 60 hours of use.

e. If batteries are unusually hot at the end of normal charge with heavy deposits of moisture around the filler caps and/or water use is high, this may indicate one or more defective cells or that the batteries are nearing the end of their useful life. See Testing Battery.

f. If batteries do not respond to normal charging, one or more cells may be defective and all should be checked. See Testing Battery. Batteries found defective must be replaced. All batteries in a car should be matched according to age, capacity and brand.

OVERALL BATTERY BANK CONDITION AFTER CHARGING

The charger can be used to determine the overall condition of the battery bank after charging. Compare the finish charge rate with the specific gravity readings of the batteries. See Table 11.

Testing Battery

TESTING WITH 36V CHARGER

The charger can be used to give an overall test of the battery bank after it has received a full charge. The finish charge rate of a good set of batteries is 1-3 amp as read on the charger ammeter.

Test: Connect charger to car and turn on. Charger ammeter needle should jump to 15 amps or more and then taper into the 1-3 amp area within 15 minutes, indicating good fully charged batteries. Battery banks failing this test should be tested with hydrometer and/or load tester. See SPECIFIC GRAVITY TEST.

Table 11

Finish Charge Rate	Specific Gravity at 80°F	Possible Condition
1-3 amps	All cells above 1.250 and even	Good
8-10 amps	All cells above 1.250 and even	Batteries nearing end of useful life
Above 4 amps	All cells below 1.250 and even	Batteries need additional charge
Above 10 amps	All cells above 1.250 and even	Batteries bad - (see TESTING BATTERIES)
Above 4 amps	Cell readings vary more than .050	See SPECIFIC GRAVITY TEST

SPECIFIC GRAVITY TEST

It is possible to determine a battery's ability to perform by measuring the specific gravity of each cell with a hydrometer. The hydrometer readings indicate two things:

a. State of Charge – The amount of electrical power stored in the battery.

b. Condition – The ability of battery to store and deliver power.

NOTE: Batteries should be fully charged before performing specific gravity tests to determine battery condition.

USING THE HYDROMETER

a. Squeeze rubber bulb and insert nozzle in cell, release bulb, slowly drawing electrolyte up into barrel.

b. Adjust electrolyte level in barrel so float rides free of bottom but is not striking top of barrel.

c. Hold hydrometer vertically, making sure float moves freely and is not contacting sides of barrel. Read scale at the level of electrolyte in the barrel.

d. Record the reading.

e. Return electrolyte to cell from which it was removed.

f. Repeat these steps on all battery cells.

Hydrometer readings are affected by the temperature of the electrolyte being tested. Measure the temperature of the electrolyte and correct your readings as follows:

Above 80°F – Add .004 to the specific gravity readings for each 10° above 80°F.

Below 80°F – Subtract .004 from the specific gravity readings for each 10° below 80°F.

INTERPRETATION OF HYDROMETER READINGS

State of Charge: Check specific gravity of each cell. Refer to Tables 12 and 13.

Table 12

Specific Gravity Reading at 80°F	State of Charge
1.250-1.270	100%
1.220-1.240	75%
1.190-1.210	50%
1.160-1.180	25%

Condition: If the difference between the highest and lowest cell is .050 (50 points) or more, the battery is nearing the end of its useful life and should be replaced.

NOTE: If the highest cell reads less than 1.200, the test for condition is questionable. Recharge battery and perform test again.

DISCHARGE (LOAD) TEST

The Discharge, or Load Test, is the recommended method of determining battery condition because it simulates golf car operation under controlled conditions. A 75 amp draw is applied to the battery bank with a Load Tester. The time it takes the battery bank to drop to 31.5 volts, along with individual battery voltages, is used to determine battery condition.

Table 13

Battery	Specific Gravity Reading Each Cell at 80°F 1	2	3	Required Action
1	1.100	1.100	1.100	Charge and recheck
2	1.260	1.180	1.250	Bad cell (2) replace battery
3	1.250	1.260	1.250	Good
4	1.190	1.170	1.120	Charge and recheck (suspect cell #3)

PREPARATION FOR DISCHARGE TEST

a. Batteries must receive a full charge before conducting DISCHARGE (LOAD) TEST.

b. DISCHARGE (LOAD) TEST must be performed within 18 hours of charging.

c. Vehicle must be used, even for short runs, prior to DISCHARGE (LOAD) TEST.

d. Electrolyte level must be correct in all cells.

DISCHARGE (LOAD) TEST PROCEDURE

a. Connect tester leads to battery bank.

b. Check and record electrolyte temperature of center cell of each battery.

c. Turn tester on.

d. After 20-30 minutes, with tester on, check and record individual battery voltages to the nearest .10 (1/10) volt.

NOTE: All six individual battery voltage readings must be made as rapidly as possible to be accurate.

e. Allow tester to shut off automatically and record time elapsed from start of discharge.

NOTE: Tester shutoff should occur at a battery voltage of 31.5v ± .2v. Check tester shutoff voltage periodically. This setting must be accurate for a valid test.

INTERPRETATION OF DISCHARGE TEST RESULTS

a. Compare individual battery voltages recorded in Step d of DISCHARGE (LOAD) TEST PROCEDURE and discard any battery that is .20 (2/10) volt lower than the highest battery in bank. If a defective battery is found, recharge the entire bank for 12 hours. Then replace the defective battery with a good fully charged battery of the same brand and date code, if possible. Equalize the bank by placing it on charge for an additional three hours, then retest.

b. If all battery voltages are within .20 volts of each other, compare discharge time from Step d of DISCHARGE (LOAD) TEST PROCEDURE with minimum times in Table 14.

NOTE: Even if individual battery voltages are satisfactory, but the discharge time fails to meet minimums in table, the entire battery bank should be replaced.

Table 14

Electrolyte Temperature (Step 3)	Minimum Discharge Time To 31.5v (Step 6)
40 to 49°F	40 Minutes
50 to 59	45
60 to 64	50
65 to 69	54
70 to 74	57
75 to 79	60
80 to 84	62
85 to 89	64
90 to 99	66
100 to 109	68
110 to 119	70
120 to 129	72
130 to 150	74

Storing Batteries

a. Batteries can remain in car.

b. Fully charge batteries.

c. Clean tops and connections.

d. Fully charged batteries should be stored in as cold an environment as possible. Batteries "self discharge" when not in use. The colder the temperature, the slower batteries self discharge.

CAUTION

Batteries in low state of charge (low specific gravity readings) will freeze at low temperatures.

Check specific gravity every 8 to 10 weeks and recharge as necessary to bring batteries to 1.250-1.270 specific gravity to prevent batteries from freezing. See Table 15.

As ice forms in a freezing battery, the electrolyte expands and can crack the case, ruining the battery.

If a battery is allowed to stand or is operated in a discharged condition for a long period of time, lead sulphate may develop on the plates, which is dense, hard and crystalline, and which cannot be electrochemically converted to normal active material again.

Table 15

State of Charge	Specific Gravity	F° — Freezing Point — C°		Risk of Sulfation
100%	1.260	-70°	-57°	Low
75%	1.230	-39°	-38°	Low
50%	1.200	-16°	-26°	Low
25%	1.170	- 2°	-19°	Moderate
Discharged	1.110	+17°	- 8°	High

Lead sulphate formed on the plates during discharge is relatively insoluable as long as the specific gravity of electrolyte is kept above 1.125 specific gravity, but if allowed to drop below this value, the lead sulphate becomes increasingly soluable and may migrate into the pores of the separators and deposit as a white crystalline mass. Subsequent charging may convert these deposits into stringy metallic lead which may SHORT the positive and negative plates through the areas affected. These small shorts may cause a condition of low cell voltage when battery is allowed to stand idle in less than 25% charged condition.

47. COMPONENT OPERATION

Solenoid

The solenoid is an electro-magnetic switch which energizes when current is applied to the small control circuit terminals. When energized, the solenoid core moves up due to magnetism created by the coil and connects two large terminals, allowing current to pass through the solenoid. When current is removed from the small terminals, the magnetic field collapses and a spring returns the core to its rest position. A single contact solenoid in the at rest position prevents current from passing through it. A double contact solenoid in the at rest position allows current to flow through its lower contacts.

NOTE: Solenoids are mounted with canister up to utilize gravitational pull on disc to aid spring in returning disc to at rest position.

Motor Resistor

Impedes current flow which reduces voltage to traction motor causing motor to run slower.

The circuitry uses solenoids and resistors to control current flow to the traction motor.

There are two basic circuits involved:

a. Solenoid control circuit includes key switch, speed control, solenoid coils and light gauge control circuit wiring.

b. Motor circuit includes solenoid contacts, resistor coils, traction motor, heavy gauge motor and battery cables, and batteries.

In the system, two 36 volt, 6 terminal solenoids control forward and reverse direction and two 36 volt, 4 terminal solenoids control speed by switching resistance in and out of the circuit.

48. ELECTRONIC SPEED CONTROL ADJUSTMENT

When properly adjusted, the speed control will provide all four speeds, and allow the parking brake to be fully applied without activating first speed. The parking brake should release before activating first speed. Adjustment is accomplished by moving the cable block on the cable as required.

To Check Speed Control Adjustment:

a. Raise rear of vehicle per LIFTING INSTRUCTIONS, SECTION 1.

b. Set parking brake.

c. Slowly depress accelerator pedal until brake releases. At this point, motor should not be running. Continue to depress pedal slowly through first, second, third, and fourth speeds. If brake does not release before first speed engages, or if fourth speed is not engaged before the pedal bottoms on the floorboard, the speed control requires adjustment.

To Adjust Speed Control:

a. Raise rear of vehicle per LIFTING INSTRUCTIONS, SECTION 1.

b. Speed control is located behind the battery tray on the left side of the vehicle. The speed has an adjustable linkage rod from the accelerator.

c. Loosen the locknut on each end of the linkage rod, Figure 105.

d. Turn linkage rod to adjust. Magnet must be partially exposed when properly set.

e. Tighten locknuts securely.

f. Follow procedure in Step c, To Check Speed Control Adjustment, to check operation.

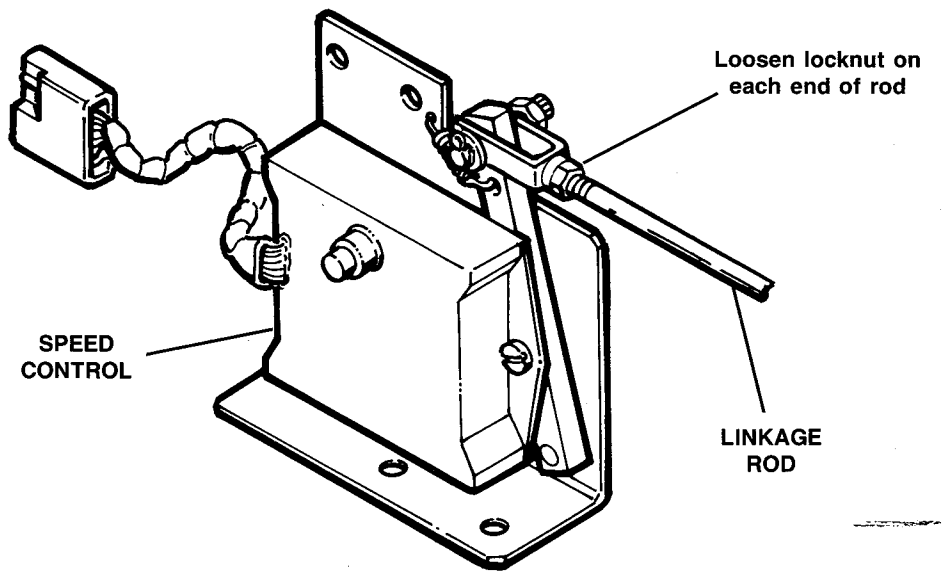

Figure 105 - Speed Control Adjustment

49. ELECTRICAL OPERATION AND CIRCUITS

Charging

Key Switch position	Off
Speed Switch Arm position	At rest
Solenoid C1	Not energized – open
Solenoid C2	Not energized – open
Solenoid F	Not energized; continuity between lower terminal; side terminals open
Solenoid R	Not energized; continuity between lower terminal; side terminals open
Voltage to Motor A1-A2	None
Resistor R1	No current flow
Resistor R2	No current flow

First Speed

Key Switch position	Forward
Speed Switch position	First speed
Solenoid C1	Not energized
Solenoid C2	Not energized
Solenoid F	Energized; continuity between side terminals; side terminals open
Solenoid R	Not energized; continuity between bottom terminals; side terminals open
Voltage to Motor A1-A2	Approximately 26.5 Volts
Resistor R1	In circuit (hot)
Resistor R2	In circuit (hot)

Second Speed

Key Switch position	Forward
Speed Switch Arm position	Second speed
Solenoid C1	Energized; continuity between large side terminals
Solenoid C2	Not energized
Solenoid F	Energized; continuity between side terminals; bottom terminals open
Solenoid R	Not energized; continuity between bottom terminals; side terminals open
Voltage to Motor A1-A2	Approximately 29 Volts
Resistor R1	Out of circuit (cold)
Resistor R2	In circuit (hot)

Third Speed

Key Switch position	Forward
Speed Switch Arm position	Third speed
Solenoid C1	Not energized
Solenoid C2	Energized; continuity between large side terminals
Solenoid F	Energized; continuity between side terminals; bottom terminals open
Voltage to Motor A1-A2	Approximately 31.5 Volts
Resistor R1	In circuit (hot)
Resistor R2	In circuit (cold)

Fourth Speed

Key Switch position	Forward
Speed Switch position	Fourth speed
Solenoid C1	Energized
Solenoid C2	Continuity between side terminals
Solenoid F	Energized; continuity between side terminals; bottom terminals open
Voltage to Motor A1-A2	Approximately 34 Volts
Resistor R1	Out of circuit (cold)
Resistor R2	Out of circuit (cold)

Reverse

Key Switch position	Reverse
Speed Switch Arm position	Same as forward speeds
Solenoid C1	Same as forward speeds
Solenoid C2	Same as forward speeds
Solenoid F	Not energized; continuity between bottom terminals; side terminals open
Solenoid R	Energized; continuity between side terminals; bottom terminals open
Voltage to Motor A1-A2	Same as forward speeds
Resistor R1	Same as forward speeds
Resistor R2	Same as forward speeds

50. SOLENOIDS

If the speed control solenoid C1 or C2 is not functioning properly, one of the following conditions will exist:

Solenoid

C1 (Above 3 coil resistor) – Stuck closed (welded)

SPEED CONTROL POSITION	CAR ACTUALLY RUNS IN ( ) SPEED
1st	2nd
2nd	2nd
3rd	4th
4th	4th

Solenoid

C1 – Stuck open (not energizing)

SPEED CONTROL POSITION	CAR ACTUALLY RUNS IN ( ) SPEED
1st	1st
2nd	1st
3rd	3rd
4th	3rd

Solenoid

C2 (Above 5 coil resistor) – Stuck closed (welded)

SPEED CONTROL POSITION	CAR ACTUALLY RUNS IN ( ) SPEED
1st	3rd
2nd	4th
3rd	3rd
4th	4th

Solenoid

C2 – Stuck open (not energizing)

SPEED CONTROL POSITION	CAR ACTUALLY RUNS IN ( ) SPEED
1st	1st
2nd	2nd
3rd	3rd
4th	2nd

Bench Testing Components

NOTE: Bench tests must be made with component out of vehicle or with all wires and connection removed from component being tested.

KEY SWITCH (Figure 106)

Equipment needed for test: Battery powered continuity tester or ohmmeter set at X1.

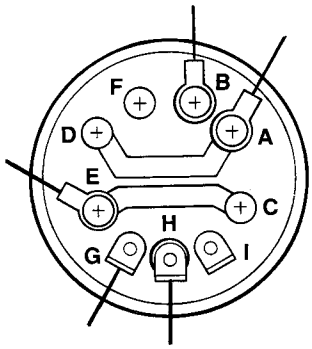

OFF - NO CONTINUITY

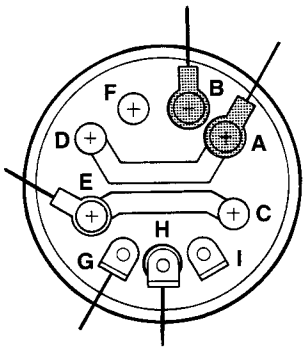

FORWARD - CONTINUITY BETWEEN A & B

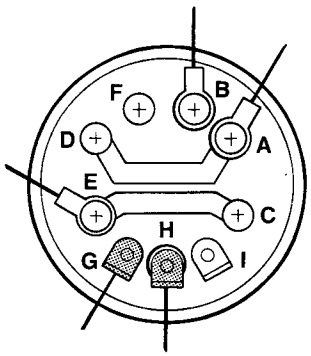

REVERSE - CONTINUITY BETWEEN G & H

Figure 106 - Key Switch Continuity Test

a. Switch in OFF position. Check continuity between all terminals, and between all terminals and case. There should be no continuity.

b. Switch in FORWARD position. Check continuity between A and B terminals.

c. Switch in REVERSE position. Check continuity between G and H terminals.

SOLENOID (Figure 107)

Equipment needed for test: 36 volt battery and a battery powered continuity tester or ohmmeter set at X1 scale

a. Double contact solenoids: Check continuity of bottom terminals.

b. Single or double contact solenoids: Check continuity across side terminals.

c. Single or double contact solenoids: Apply 36 volts to small terminals, check for solenoid energizing (click).

d. Single or double contact solenoids: Apply 36 volts to small terminals, check continuity across side terminals.

51. ELECTRIC MOTOR

Inspecting/Replacing Brushes

The motor is totally enclosed and the amount of brush wear is determined by use of a 1/16 inch diameter drill inserted in each of two holes in the end shield. With new brushes, a 1/16 inch diameter rod can be inserted approximately .78 inch into brush measurement holes. Brushes should be replaced when rod can be inserted 1.56 inches into hole. This leaves approximately 1/8 inch allowable wear remaining.

CAUTION

Continued operation of motor with worn brushes will result in damage to the armatures.

The motor must be disassembled to service brushes.

Check No. 1
Double Contact

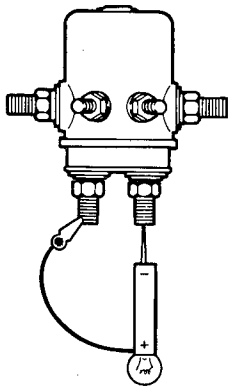

Light on or 0 ohms – proceed to Check No. 2.
Light out or any ohm reading – "bad".

Check No. 2
Single or Double

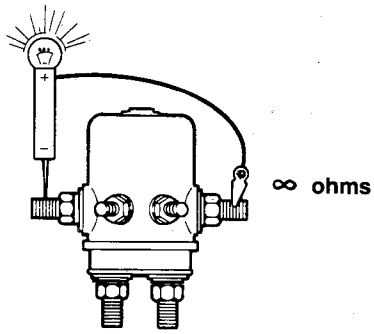

Light out or ∞ ohms – proceed to Check No. 3.
Light on or any ohm reading – "bad".

Check No. 3
Double or Single

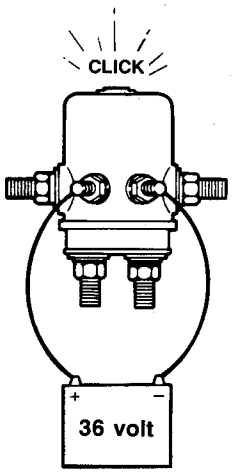

Click – proceed to Check No. 4.
No click – "bad".

Check No. 4
Double or Single

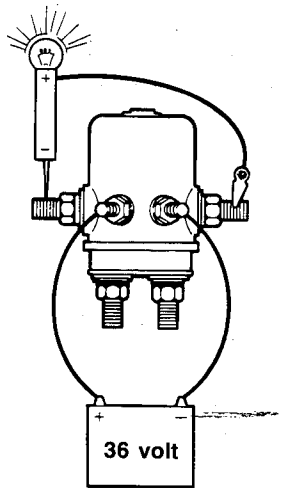

Light on or 0 ohms – solenoid good.
Light out or any ohm reading – "bad".

Figure 107 – 4-Step Solenoid Bench Test

Motor Assembly (Figure 108)

a. Remove battery bank positive and negative cables. Remove A1, A2, S1, and S2 cables from motor.

b. Mark end cover to stator relationship on each end to allow future alignment during reassembly. This can be done with a cold chisel or paint marker.

c. Remove two clamp screws (22) from differential end cover (21).

d. Carefully separate motor from differential end cover (21) and withdraw from pinion shaft.

e. Position motor on bench and remove two commutator end cover retaining screws (7), three bearing retaining screws (9) and loosen the S1 and S2 terminal retaining nuts.

f. Carefully remove stator (3) and commutator end frame (8) from armature (4).

Inspection

a. Check each brush for free movement in its holder and examine it for wear and general condition. If brush is broken, cracked, severely chipped, or worn to a length of less than 5/8 inch, measured on the short side of the brush, replace both brush and terminal assemblies.

b. Examine the condition of the brush springs. Make certain the spring coils are uniform and the springs do not appear discolored, which may indicate overheating that has caused loss of spring tension. If spring damage is evident, replace the spring(s), or use a small spring scale to determine if the spring requires one pound or more force to lift it at the point of contact with the worn brush.

Replacement

To replace brushes and/or springs, loosen the A1 and A2 terminal nuts (6) to release the terminals from the commutator end frame (8). Remove the two brush plate retaining screws (13) and withdraw the plate. Remove worn brushes and replace with new ones, routing long brush lead under brush plate to opposite side. Reinstall brush plate in end frame and position A1 and A2 terminals. Tighten terminal nuts (6) to 50-70 in.-lbs.

Armature Inspection

a. Visually inspect commutator bars for evidence of overheating and erosion. This is an indiction of an open circuit in the armature winding. If this condition is present, measure the armature resistance by selecting any bar and then counting around to the seventeenth bar. Compare the resistance value for this set of windings with the specified resistance of .020 ohms. If it does not match this value, the armature should not be used.

b. If one or more armature conductors are abnormally black or appear burned compared with the other armature conductors, this is an indication of shorted armature winding. To check further, first blow off any accumulated dust and test on a growler. If the short circuit is not confirmed by the growler test, check resistances and apply a high potential test not exceeding 600 volts AC for one minute. If armature does not pass these teste, if should not be used.

c. If heat discoloration appears uniformly over the commutator or windings, it is usually an indication of overloading of the motor or vehicle. Even if the armature passes all tests, it will probably have a shortened service life. The cause of the overloading must be determined and corrected, or motors will be burned out frequently.

d. Bubbled insulation and individual brush burn marks on the commutator are indications that the motor has been overloaded to the point of stalling with power applied.

Armatures which have failed are rarely repairable and should be replaced.

Commutator Inspection and Reconditioning

Inspect condition of commutator during each brush replacement. Commutator bars should not be pitted or grooved in the brush track. If these conditions exist, the armature should be turned in a lathe, limiting the depth of cut to .005 inch or less on a side and repeat until smooth and even. Before the final cut, the mica insulator between each of the commutator bars should be removed to a depth of .032 inch below the surface of the bar. Make certain no mica slivers remain along the under cut.

Dynamic balance the armature to with~~inn .00~~15 inch amplitude at 3000 rpm. After balancing, the final finish cut should be made with a diamond tool to obtain a surface finish of 8 to 16 micro inches.

Do not reuse an armature with a commutator diameter less than 2.625 inches.

After refinishing, measure for eccentricity. This should not exceed .001 inch total indicator reading for the entire armature, and no more than .0002 inch bar to bar difference.

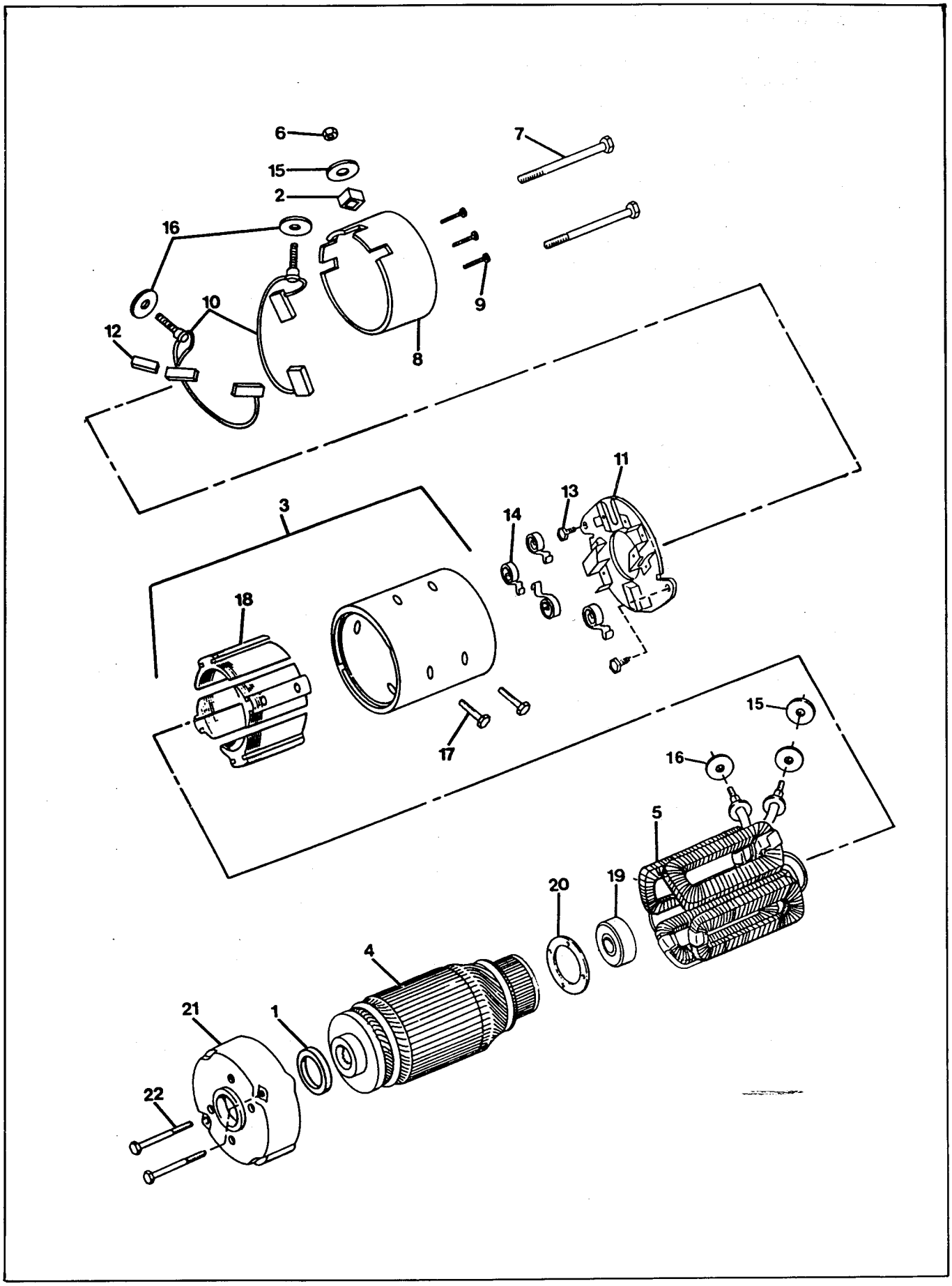

Figure 108 – Motor Assembly

Inspection of Field Windings

Visually inspect field coil insulation for discoloration or charring. Burned insulation is an indication of overheating due to overloads, grounded or short circuited winding.

To check field winding for grounds, connect ohmmeter to S1 terminal and frame, and to S2 terminal and frame. Continuity indicates a grounded field.

To check for open or shorted winding, connect the ohmmeter between S1 and S2 terminals. Resistance should be .016 ohms ± .0020 ohms at 77°F.

Bearing Inspection

The commutator end bearing is prelubricated with a special high temperature grease and sealed.

Check bearing by turning with your fingers. Check for binding or gritty effects and for excessive looseness or wobble. Replace any bearing with a condition even slightly questionable.

Remove old bearing from end of armature using a suitable bearing puller. To reinstall bearing, use an appropriate size arbor that exerts pressure on inner ring, and press bearing into place on end of armature. Do not drive bearing with a hammer as this will damage bearing.

Reassembly (Figure 108)

a. Place commutator end frame on bench with brush rigging facing upward. Push each brush back into brush holder far enough to allow commutator to pass under it without hitting. Position end of each brush spring so it is against side of brush and holds brush in place.

b. Slide armature (4) with ball bearing into end frame, and install bearing palte retaining screws (9).

c. Push end of each brush into commutator, allowing brush spring to position itself so it rides on end of brush. Check that each brush lead is free of travel down slot in brush holder as brush wears.

d. Install stator over armature aligning marks, and seat by tapping lightly with soft faced hammer.

e. Lay motor on side and install commutator end mounting screws (7) and tighten to 90-110 in.-lbs.

f. Reinstall motor to drive end cover (21), position aligning marks, and tap lightly with soft hammer to seat frame (3) on to cover. Replace mounting screws (22) and tighten to 90-110 in.-lbs.

g. Reconnect cables A1, A2, S1, and S2 to motor and then reconnect battery positive and negative cables, Figure 109.

h. Test for proper function.

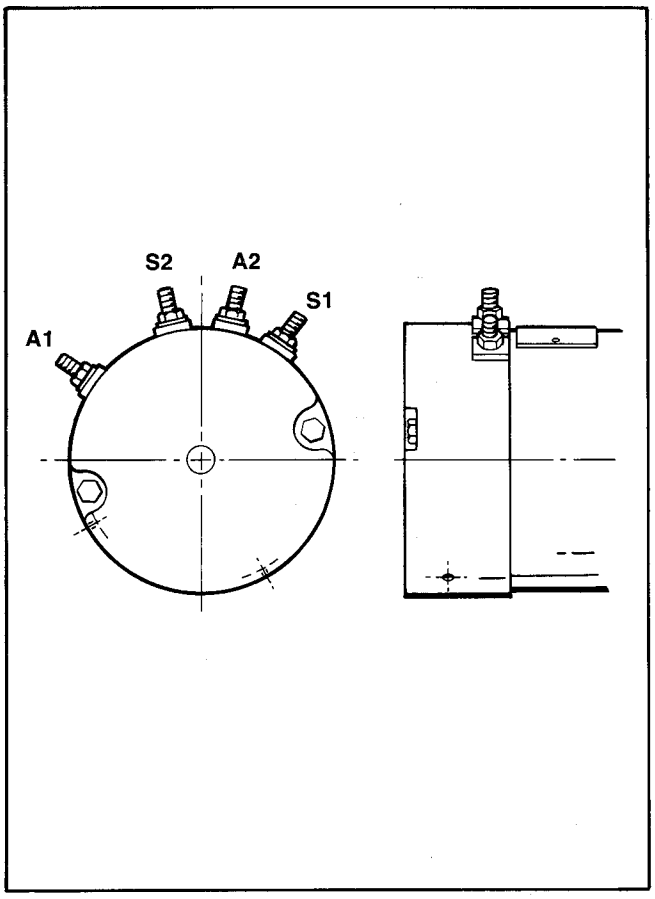

Figure 109 – Motor Terminal Identification

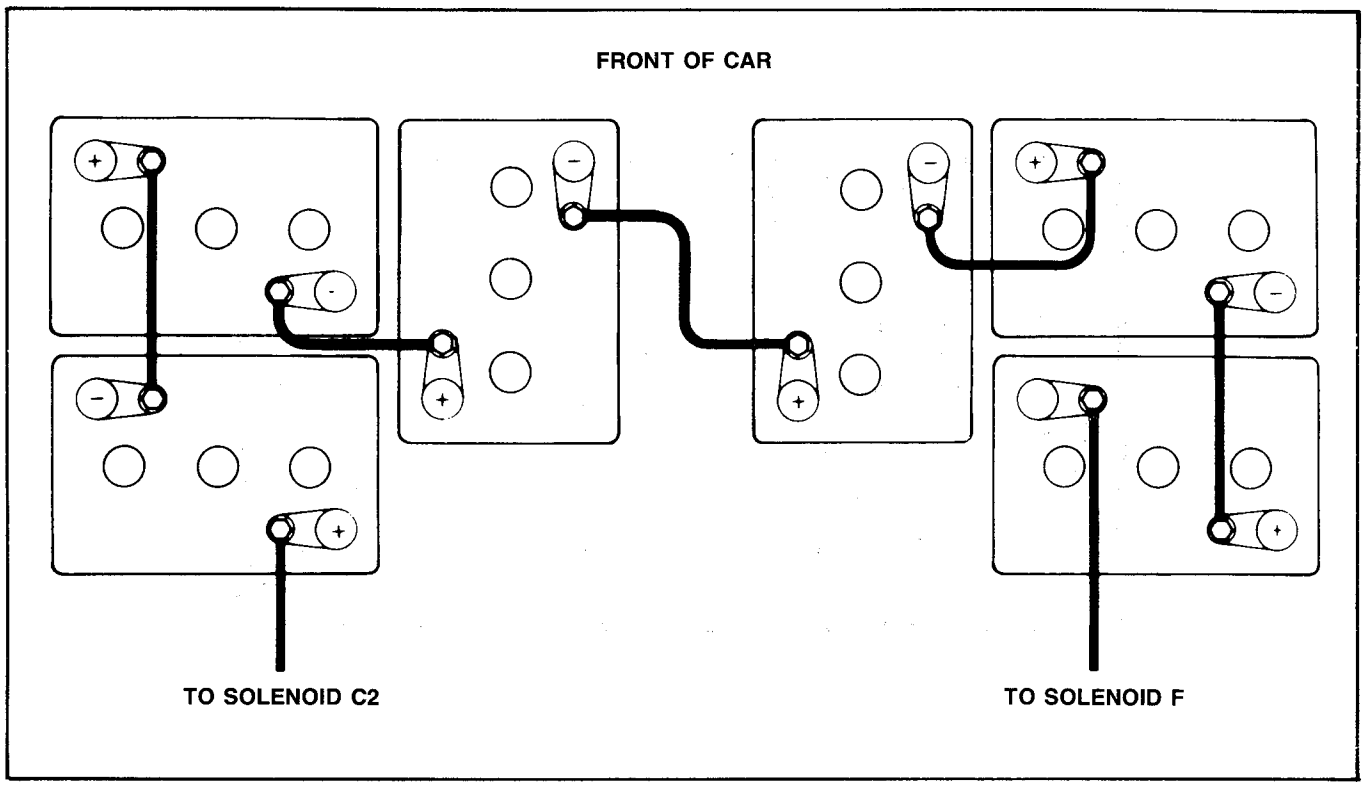

Figure 110 – Battery Installation
Electric ParCar

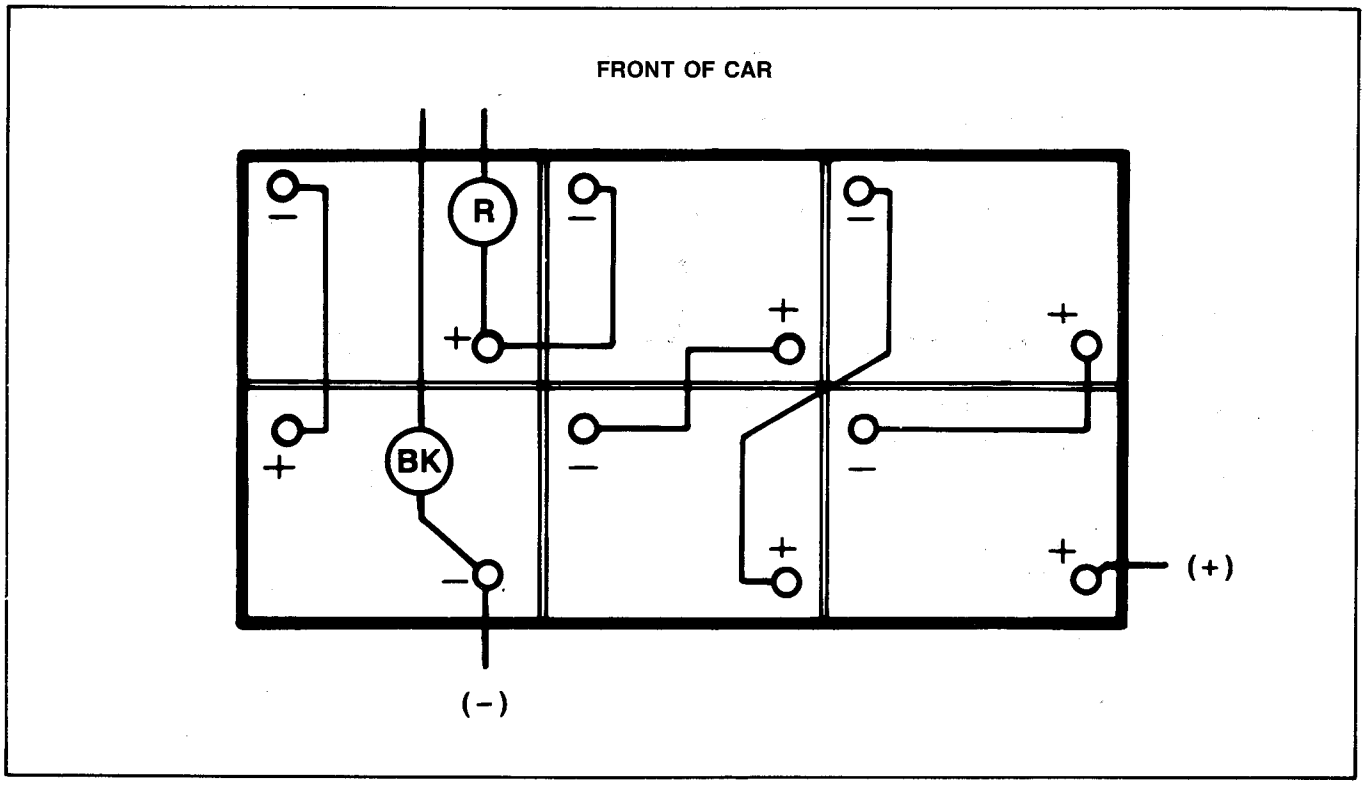

Figure 111 – Battery Installation
Electric Utilitruck

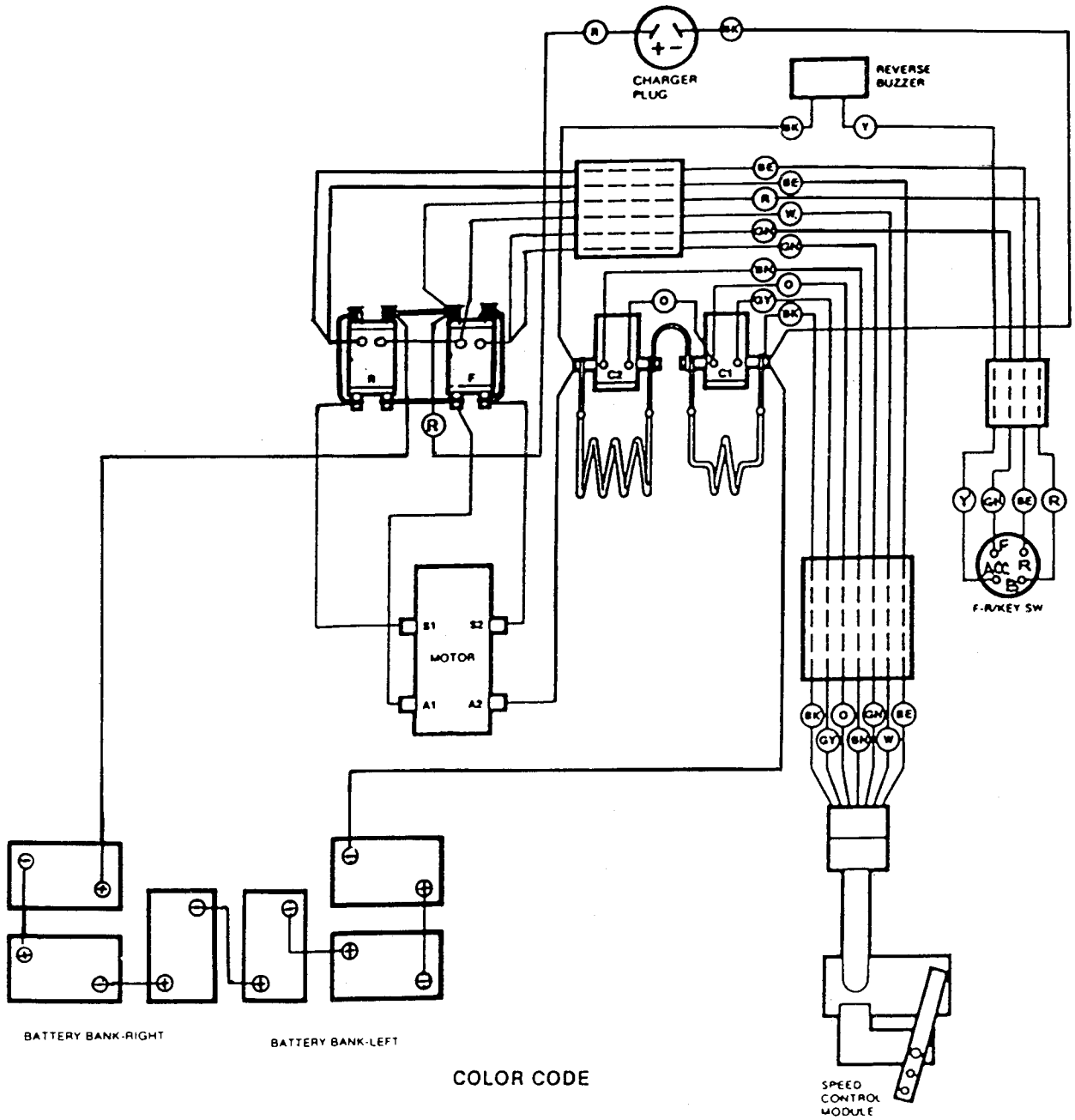

COLOR CODE

O	—	Orange
Y	—	Yellow
R	—	Red
W	—	White
BK	—	Black
BN	—	Brown
BE	—	Blue
GN	—	Green

All Unspecified Cables Are Black

Figure 112 – Wiring Diagram
Electric ParCar

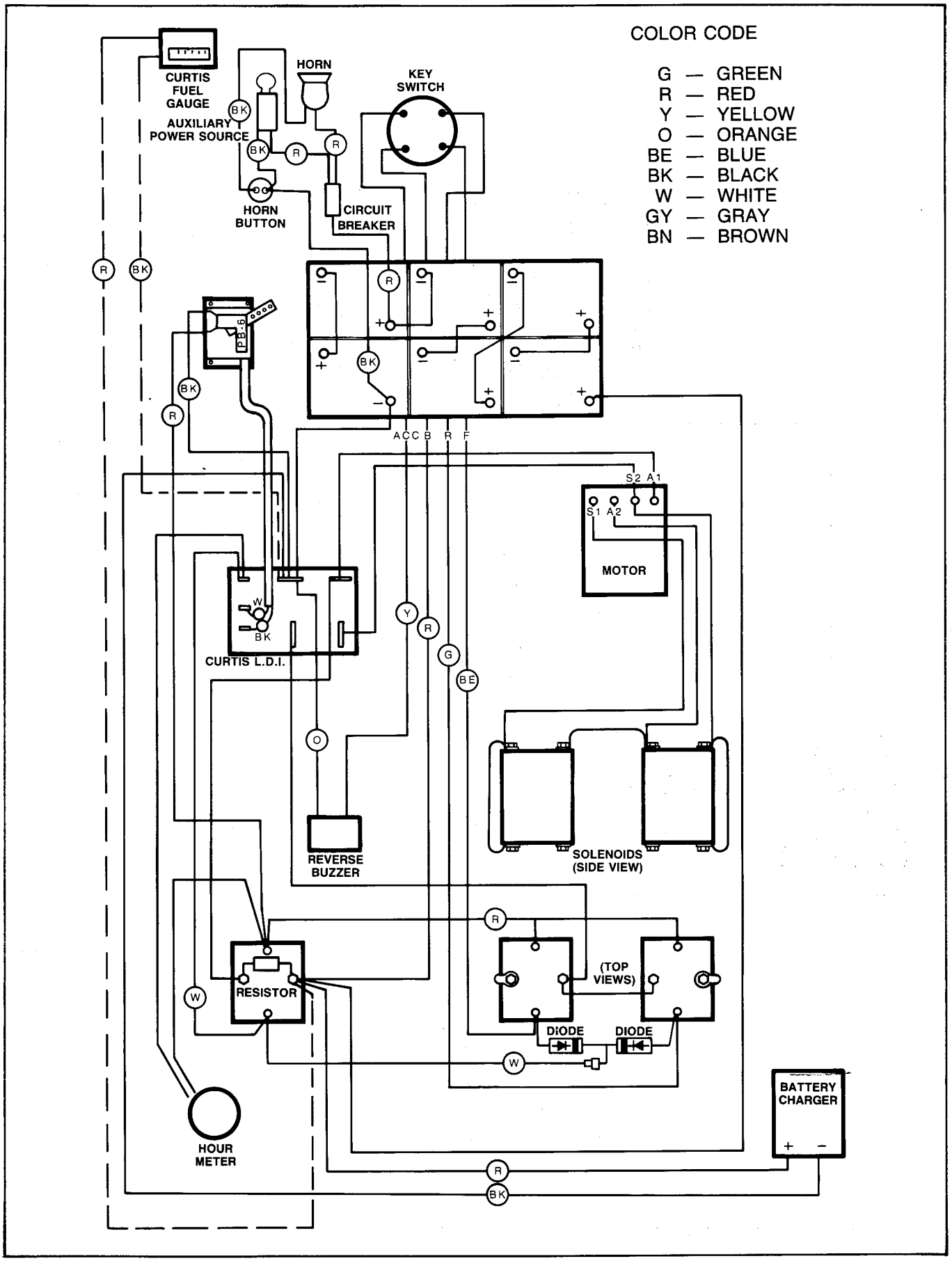

Figure 113 – Wiring Diagram
Electric Utilitruck

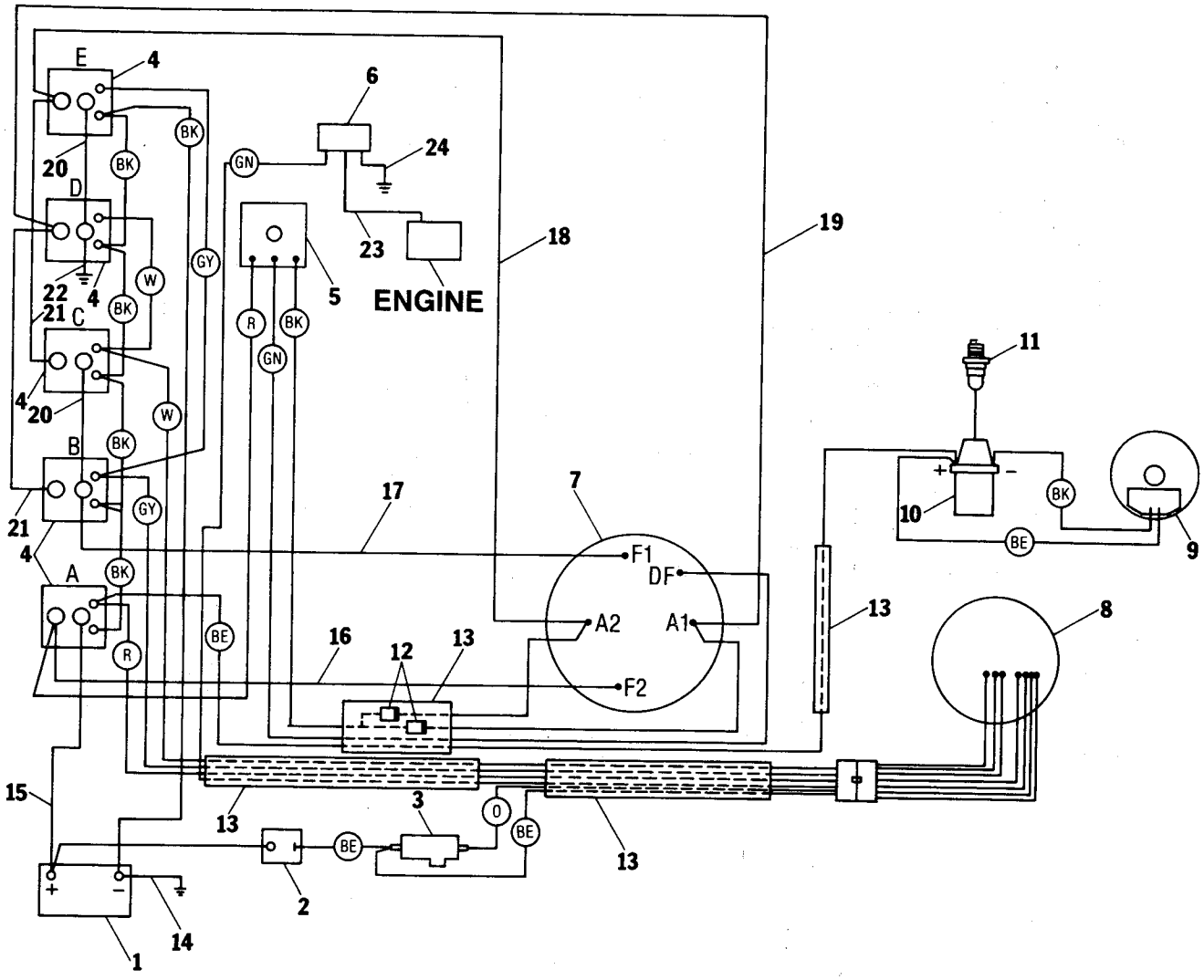

INDEX NO.	PART NO.	NAME
1	66090-88	BATTERY
2	74592-68	CIRCUIT BREAKER
3	71506-63	MICRO SWITCH
4	71470-87	SOLENOID (5)
5	74510-85A	VOLTAGE REGULATOR
6	71402-79	REVERSE BUZZER
7	30083-69C	STARTER GENERATOR
8	71762-82A	KEY SWITCH ASSEMBLY
9	30509-86	IGNITION MODULE
10	31601-63A	COIL
11	32301-82	SPARK PLUG
12	74886-67	DIODE, SPEED SWITCH (2)
13	70019-88A	MAIN WIRING HARNESS
14	70459-89	BATTERY CABLE, NEGATIVE
15	70196-89	BATTERY CABLE, POSITIVE

INDEX NO.	PART NO.	NAME
16	70317-88	SOLENOID CABLE
17	70316-88	SOLENOID CABLE
18	70319-88	SOLENOID CABLE
19	70318-88	SOLENOID CABLE
20	70313-88	SOLENOID CABLE
21	70314-88	SOLENOID CABLE
22	70315-88	SOLENOID CABLE
23	70164-87	STRAP ASSEMBLY GROUND
24	70026-88	CABLE, BUZZER TO GROUND

Figure 114 – Wiring Diagram
Gasoline ParCar 5 Solenoid System

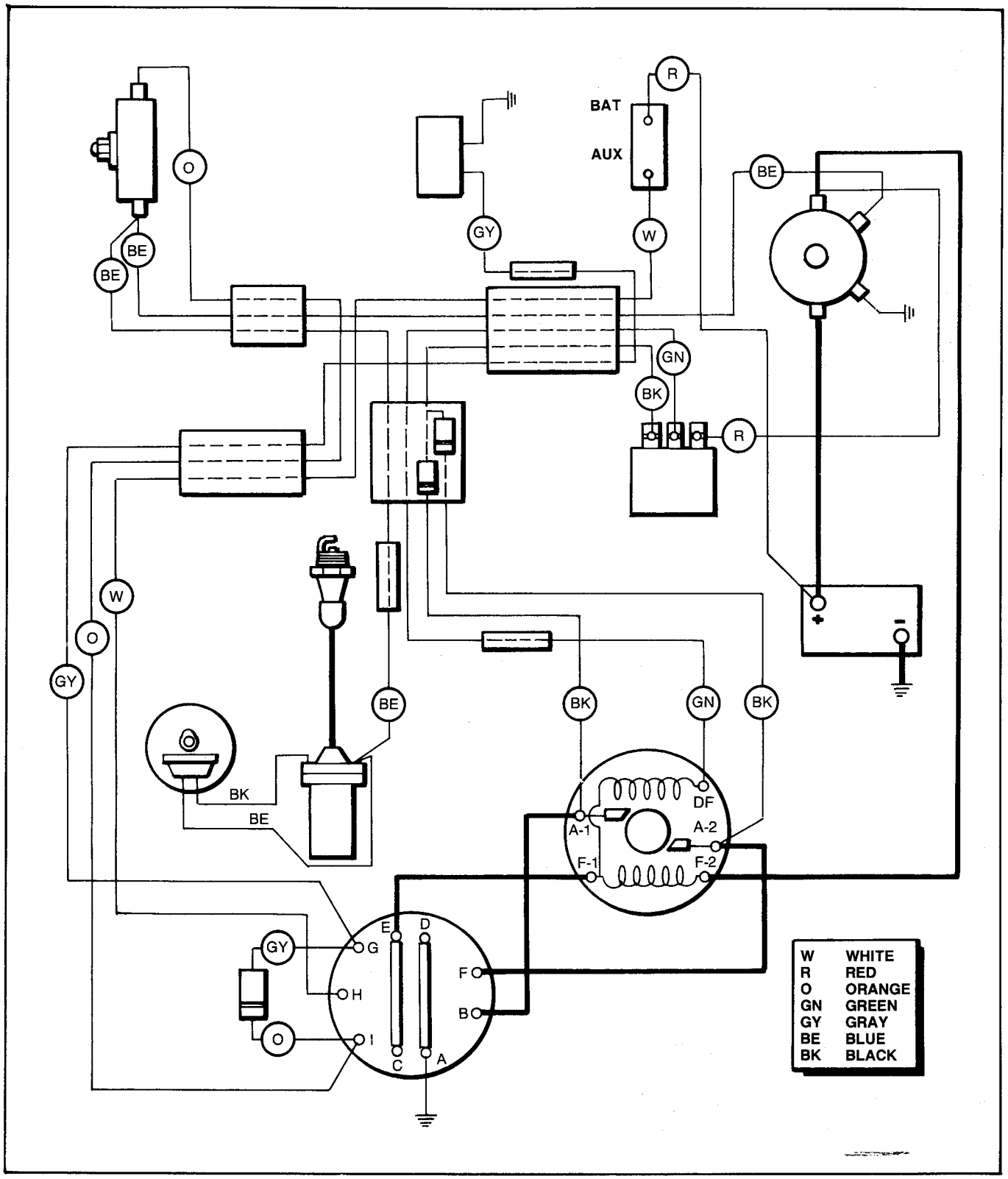

Figure 115 – Wiring Diagram
Gasoline ParCar 1 Solenoid System

COLUMBIA PARCAR®

350 N. Dewey Ave. • P.O. Box 30
Reedsburg, WI. 53959

Columbia ParCar products are manufactured under one or more ot the following patents: U.S. Patents — 2986162, 2987934, 2998809, 3116089, 3144860, 3226994, 3229792, 3434887, 3559773, 3673359, 3680403, 3683716, 3709317, 4648473, Des. 225 626.